This is a digital copy of a book that was preserved for generations on library shelves before it was carefully scanned by Google as part of a project to make the world's books discoverable online.

It has survived long enough for the copyright to expire and the book to enter the public domain. A public domain book is one that was never subject to copyright or whose legal copyright term has expired. Whether a book is in the public domain may vary country to country. Public domain books are our gateways to the past, representing a wealth of history, culture and knowledge that's often difficult to discover.

Marks, notations and other marginalia present in the original volume will appear in this file - a reminder of this book's long journey from the publisher to a library and finally to you.

Usage guidelines

Google is proud to partner with libraries to digitize public domain materials and make them widely accessible. Public domain books belong to the public and we are merely their custodians. Nevertheless, this work is expensive, so in order to keep providing this resource, we have taken steps to prevent abuse by commercial parties, including placing technical restrictions on automated querying.

We also ask that you:

+ *Make non-commercial use of the files* We designed Google Book Search for use by individuals, and we request that you use these files for personal, non-commercial purposes.

+ *Refrain from automated querying* Do not send automated queries of any sort to Google's system: If you are conducting research on machine translation, optical character recognition or other areas where access to a large amount of text is helpful, please contact us. We encourage the use of public domain materials for these purposes and may be able to help.

+ *Maintain attribution* The Google "watermark" you see on each file is essential for informing people about this project and helping them find additional materials through Google Book Search. Please do not remove it.

+ *Keep it legal* Whatever your use, remember that you are responsible for ensuring that what you are doing is legal. Do not assume that just because we believe a book is in the public domain for users in the United States, that the work is also in the public domain for users in other countries. Whether a book is still in copyright varies from country to country, and we can't offer guidance on whether any specific use of any specific book is allowed. Please do not assume that a book's appearance in Google Book Search means it can be used in any manner anywhere in the world. Copyright infringement liability can be quite severe.

About Google Book Search

Google's mission is to organize the world's information and to make it universally accessible and useful. Google Book Search helps readers discover the world's books while helping authors and publishers reach new audiences. You can search through the full text of this book on the web at `http://books.google.com/`

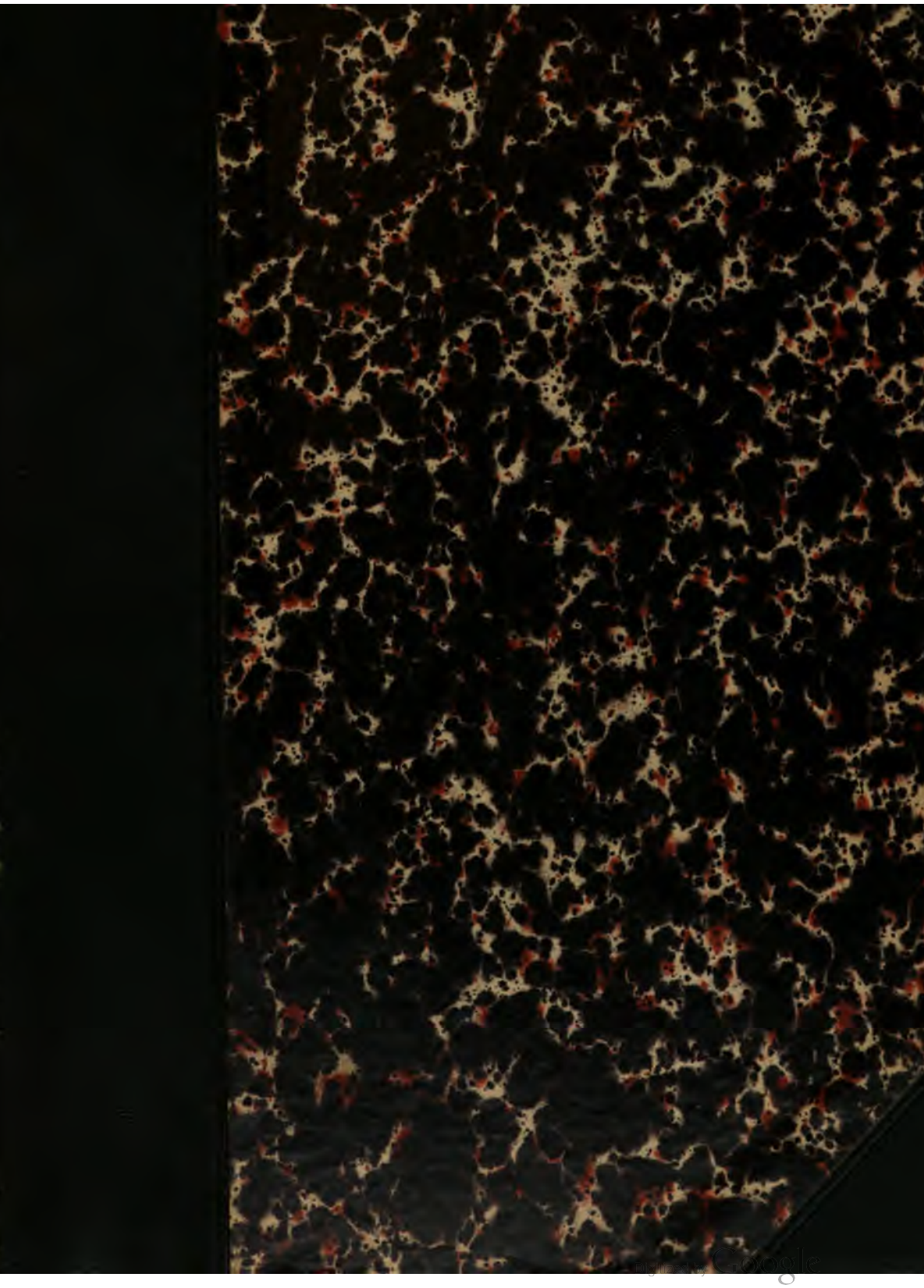
Digitized by Google

Sci1085.70

Bd. March, 1879.

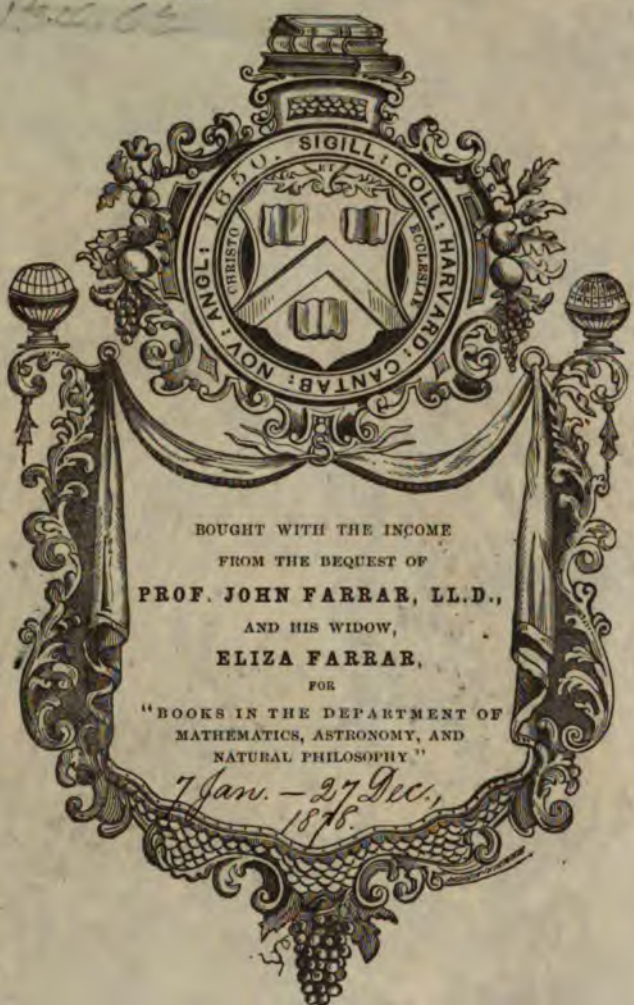

BOUGHT WITH THE INCOME
FROM THE BEQUEST OF
PROF. JOHN FARRAR, LL.D.,
AND HIS WIDOW,
ELIZA FARRAR,
FOR
"BOOKS IN THE DEPARTMENT OF
MATHEMATICS, ASTRONOMY, AND
NATURAL PHILOSOPHY"

7 Jan. – 27 Dec., 1878.

SCIENCE CENTER LIBRARY

Digitized by Google

Digitized by Google

Digitized by Google

Digitized by Google

Digitized by Google

REPERTORIUM

FÜR

EXPERIMENTAL-PHYSIK,

FÜR

PHYSIKALISCHE TECHNIK,

MATHEMATISCHE & ASTRONOMISCHE INSTRUMENTENKUNDE.

HERAUSGEGEBEN

VON

DR. PH. CARL,
PROFESSOR DER PHYSIK AN DER KGL. KRIEGS-AKADEMIE IN MÜNCHEN.

VIERZEHNTER BAND.

ATLAS.
(MIT TAFEL I.–XXVIII.)

MÜNCHEN, 1878.
DRUCK UND VERLAG VON R. OLDENBOURG.

Digitized by Google

13462
Sci1085.70

1871, Jan. 7 - Dec. 27.
Farrar fund.

Digitized by Google

Verzeichniss der Figurentafeln.

Tafel I.	Fig. 1 und 2. Zu der Abhandlung von Chwolson: Ueber die Wirkung des Ausglühens auf den galvanischen Widerstand harter Drähte. — Fig. 3. Wagebarograph von A. Sprung.
Tafel II u. III.	Amsler's hydrometrischer Flügel.
Tafel IV.	Fig. 1 und 2. Meyn's Hygrometer. — Fig. 3. Regelmässige Sprünge in Brillengläsern.
Tafel V.	Hängebögen von E. Schneider.
Tafel VI, VII, VIII.	Schneider's magnetischer Universaltheodolith.
Tafel IX.	Schneider's magnetische Variationsapparate.
Tafel X.	Anrufapparat für das Telephon von W. E. Fein.
Tafel XI u. XII.	Windstärkemesser mit elektrischem Zählwerk, construirt von P. Schultze in Dorpat.
Tafel XIII.	Fig. 1—4. Telephon-Signalapparat von J. Puluj. — Fig. 5a—5c. Meyerstein's Apparat zur Bestimmung der Brennweite sphärischer Linsen.
Tafel XIV.	v. Feilitzsch's hydrodynamische Luftpumpe.
Tafel XV.	Hammer's Vorlesungs-Elektroskop.
Tafel XVI.	A. Schell, Distanzmesser des Obersten J. Roskiewicz.
Tafel XVII u. XVIII.	P. Schreiber's Barothermograph.
Tefel XIX.	Jäger's Distanzmesser.
Tafel XX.	E. Obach's Tangentenbussole zum Messen starker elektrischer Ströme.
Tafel XXI.	Fig. 1—3. Höfler's Schulapparat zur Demonstration der Superposition der Wellen. — Fig. 4 bis 6. Zu der Abhandlung von A. Wassmuth: Ueber das Maximum der Stromstärke.

Digitized by Google

Tafel XXII.	Beitrag zu den Erfahrungen über Naudet'sche Aneroide von Ch. August Vogler.
Tafel XXIII.	E. Schneider's Detailtheodolith mit diastimometrischem Fernrohre.
Tafel XXIV.	Fig. 1. Neues Wagebarometer mit Rolle und in Quecksilber schwimmendem Gegengewicht von Dr. Paul Schreiber in Chemnitz. — Fig. 2. Riecke's Tangentenmultiplicator.
Tafel XXV.	E. Schneider's Sinus-Elektrometer nach Thomson.
Tafel XXVI.	V. Thallmayer, Ueber das Entwerfen von Apparaten zum Anreissen von Curven.
Tafel XXVII u. XXVIII.	A. Schell, Das Stand-Aneroidbarometer.

Digitized by Google

Digitized by Google

Fig. 3.

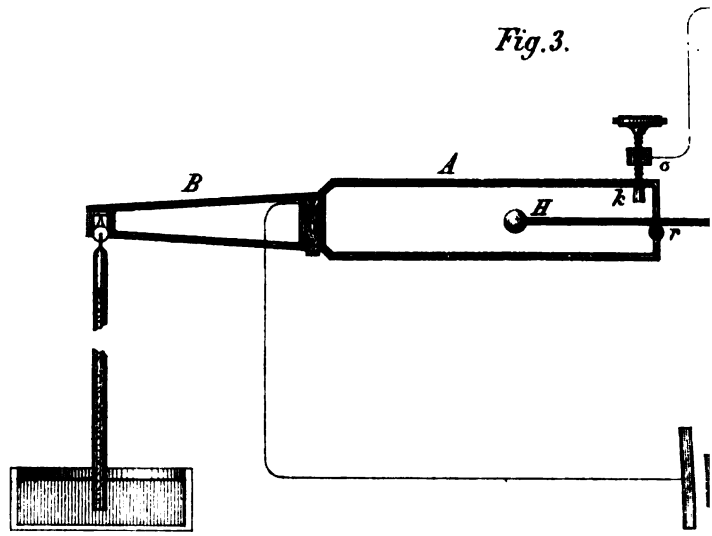

Chwolson. Über die Wirkung des Ausglühens auf den galvanischen Widerstand harter Drähte.

Fig. 1.

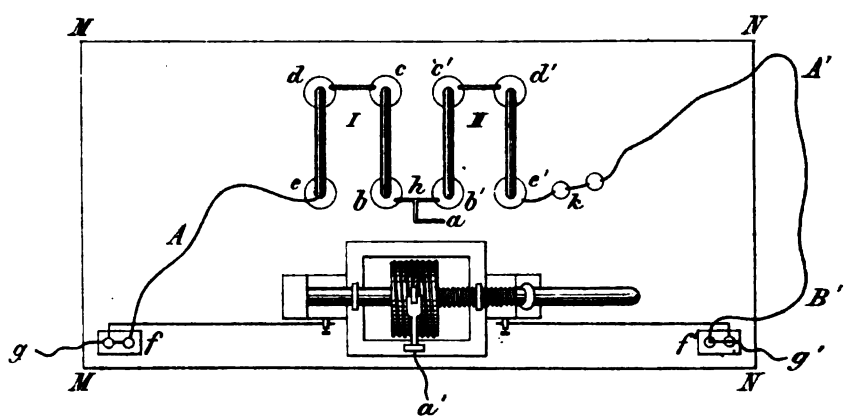

Digitized by Google

ph von A. Sprung.

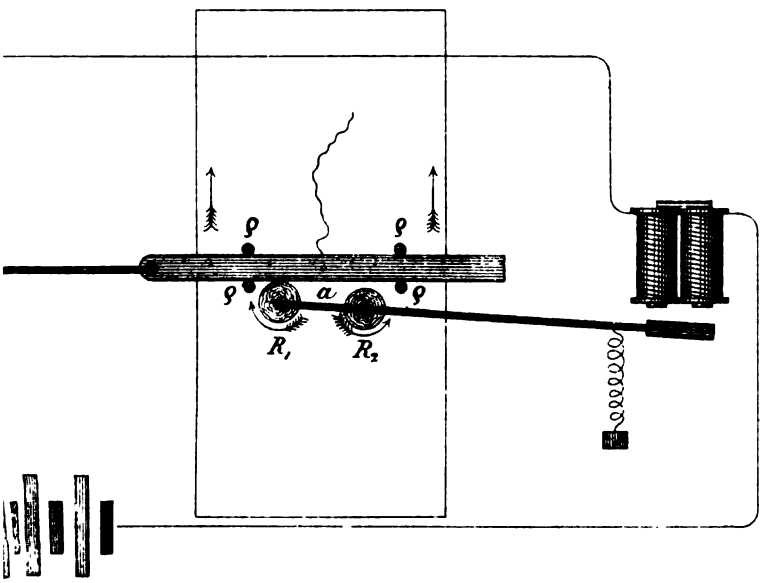

Fig. 2

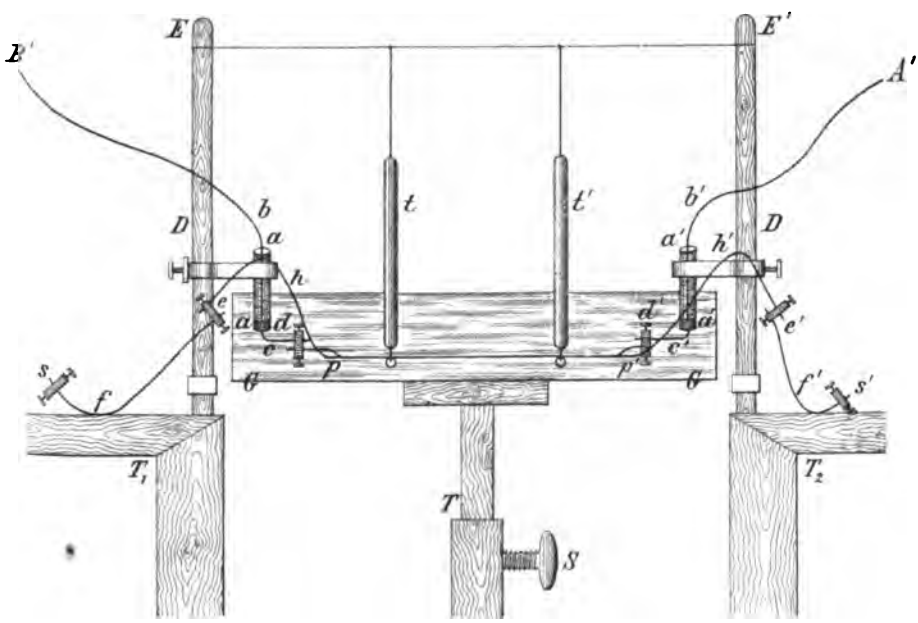

Lith. Anstv. Jos. Huber vorm. Jos. Moises, München

Digitized by Google

Digitized by Google

Digitized by Google

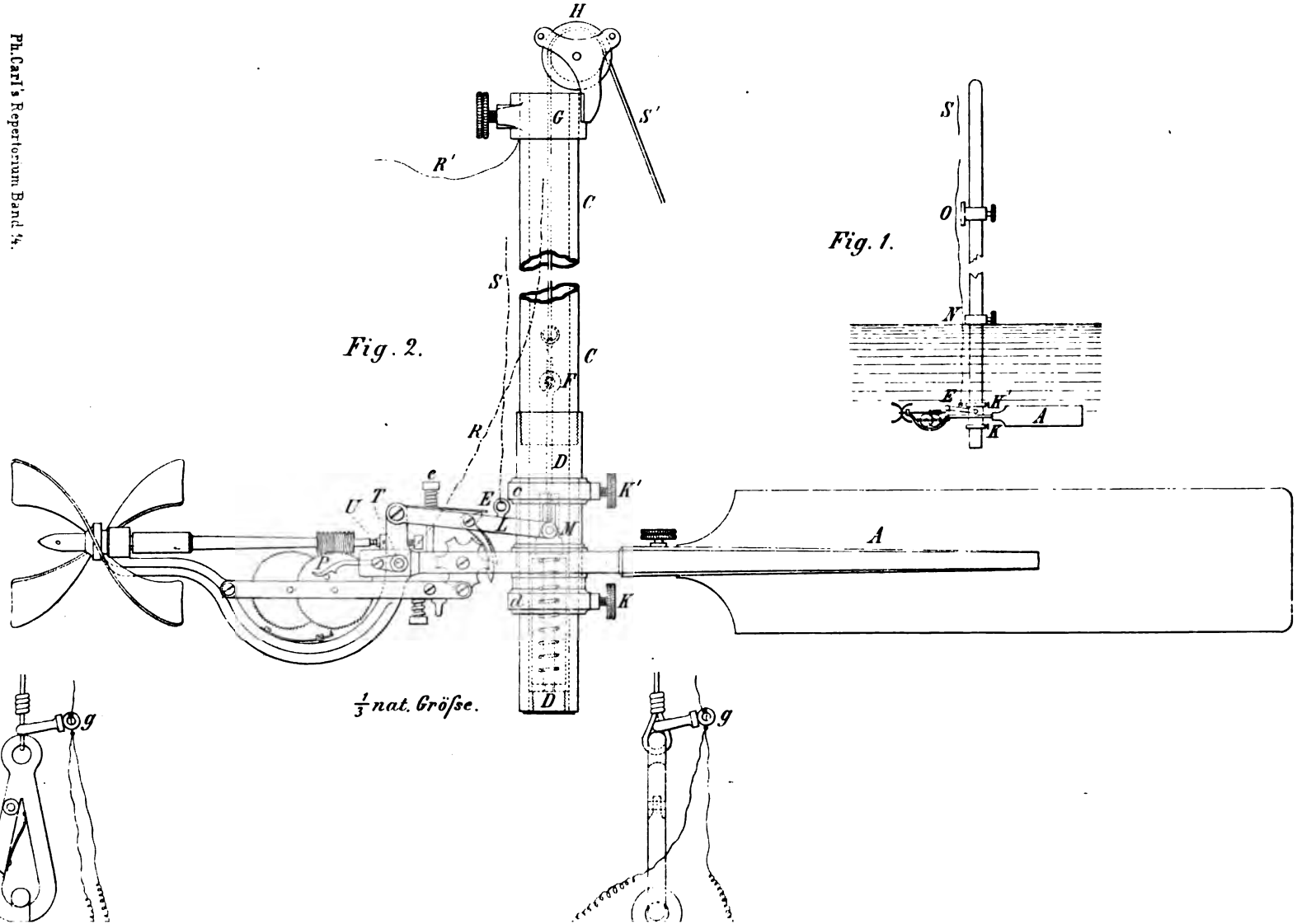

Fig. 2.

$\frac{1}{3}$ nat. Grösse.

Fig. 1.

Digitized by Google

Amsler's
Hydrometrischer Flügel.

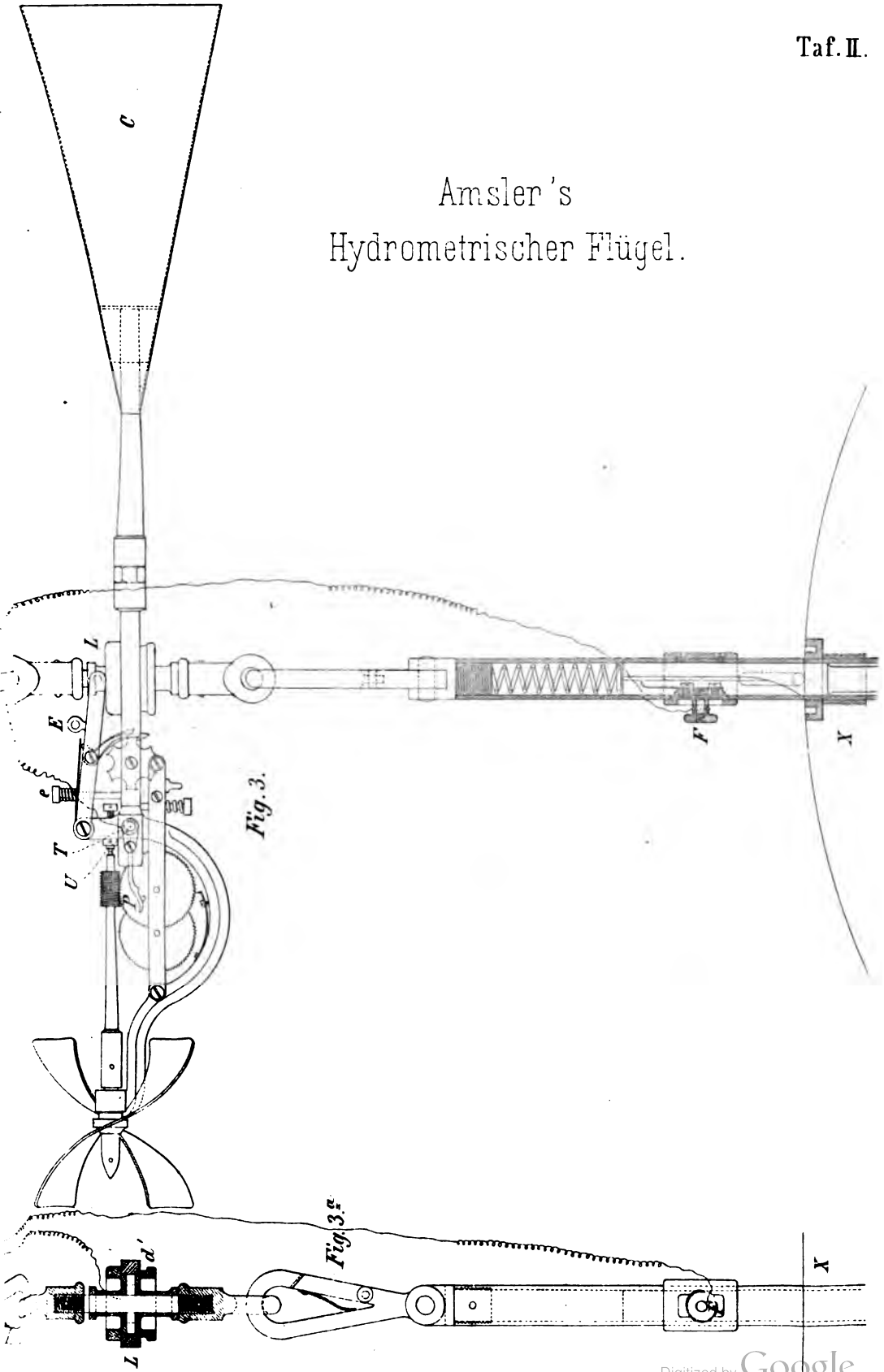

Fig. 3.

Fig. 3.a

Digitized by Google

Digitized by Google

Digitized by Google

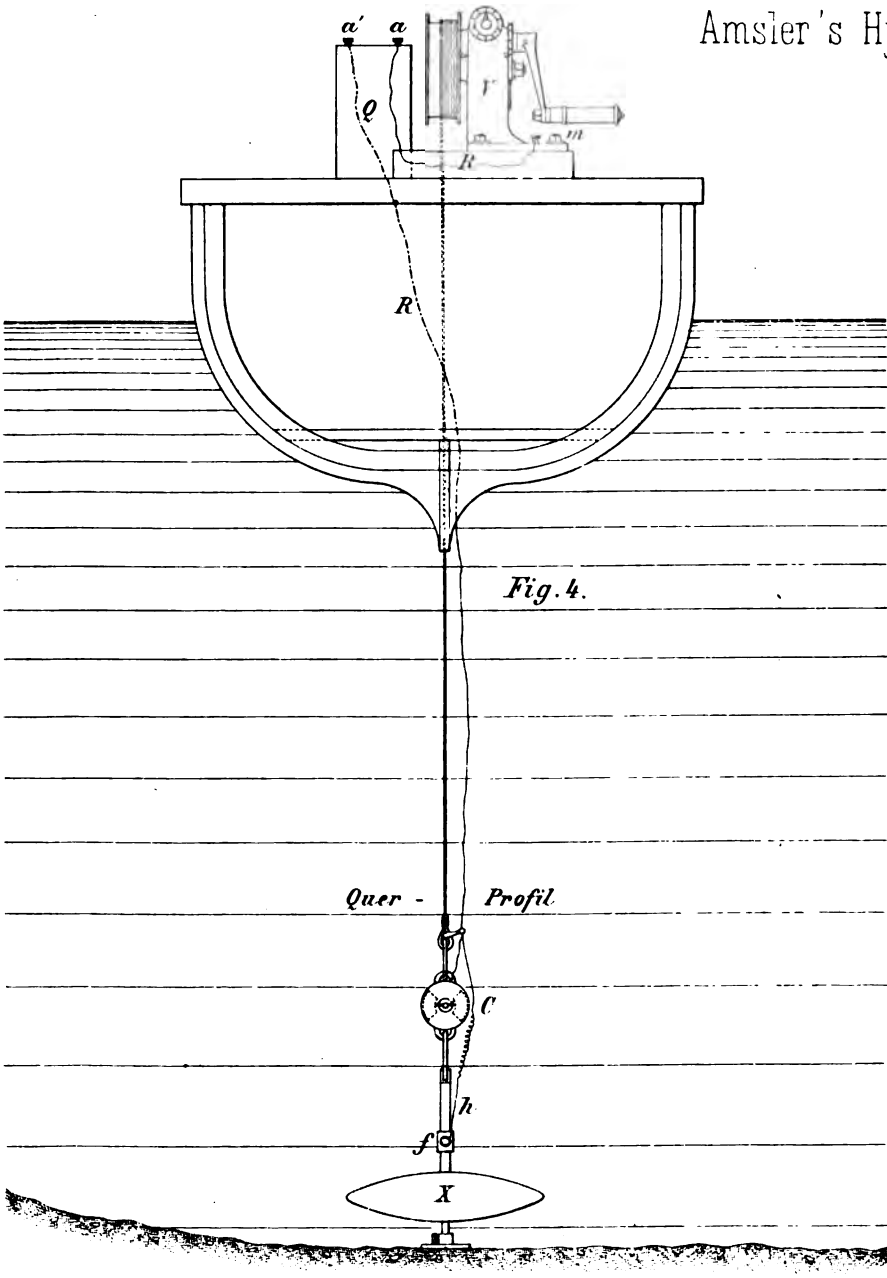

Fig. 4.

Digitized by Google

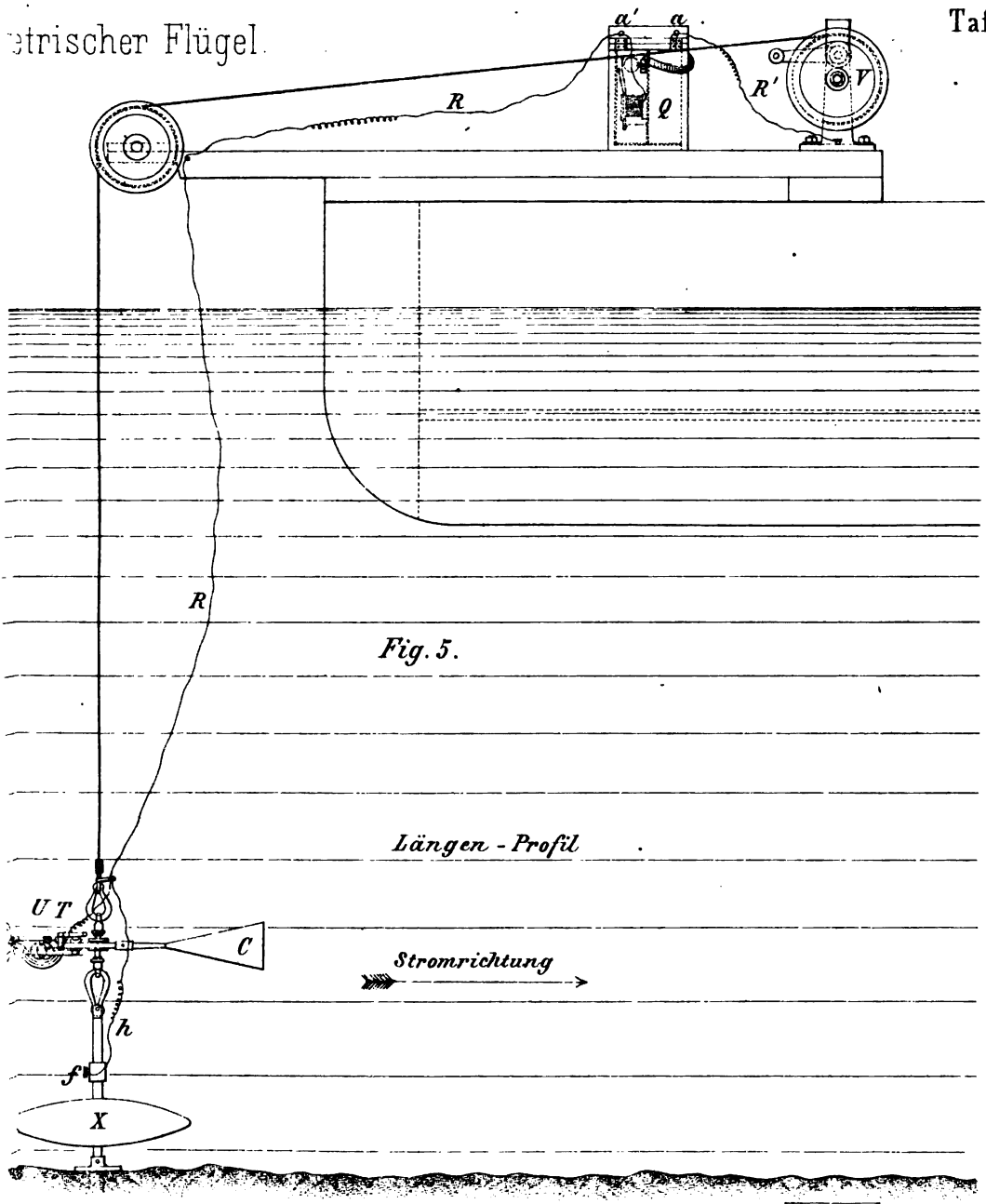

Fig. 5.

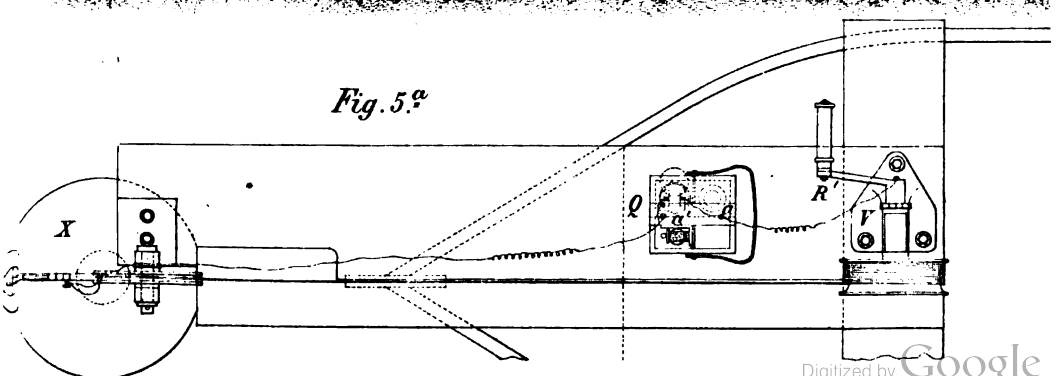

Fig. 5.a

Digitized by Google

Digitized by Google

Digitized by Google

Fig

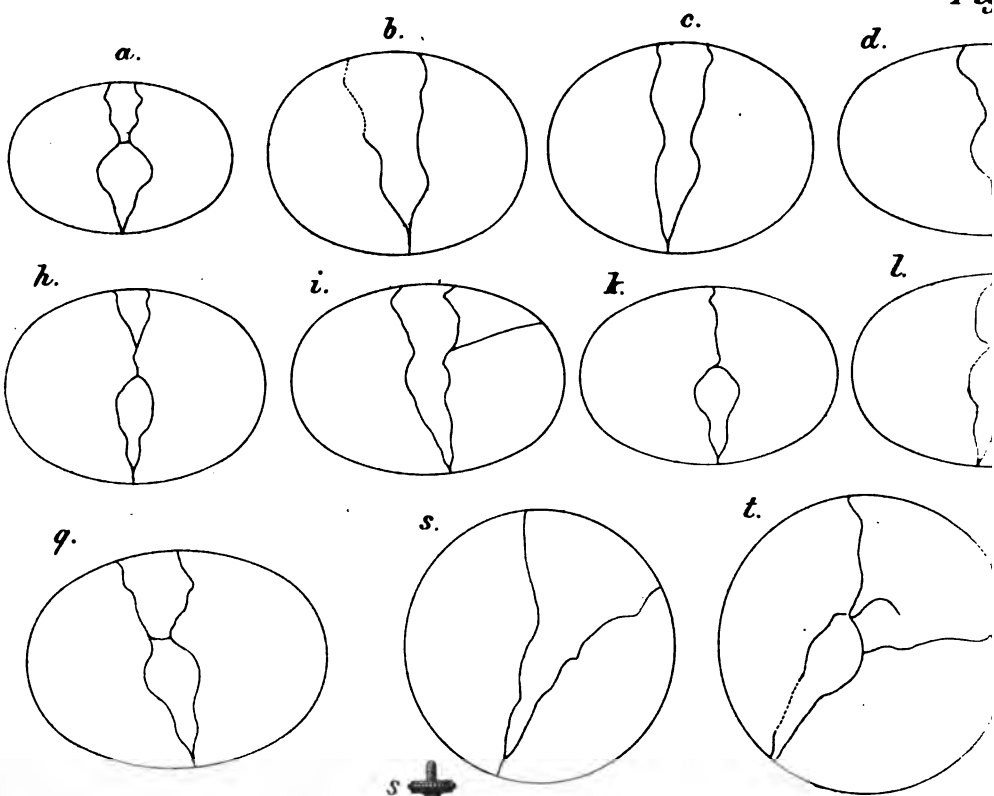

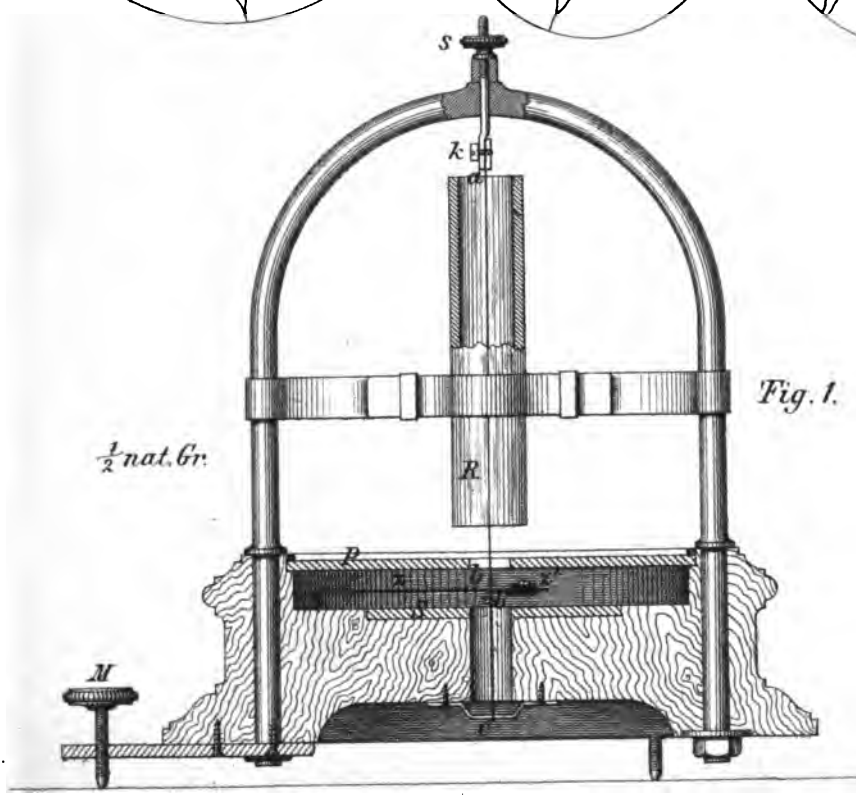

Fig. 1.

$\frac{1}{2}$ nat. Gr.

R. Meyn

Digitized by Google

s. 3.

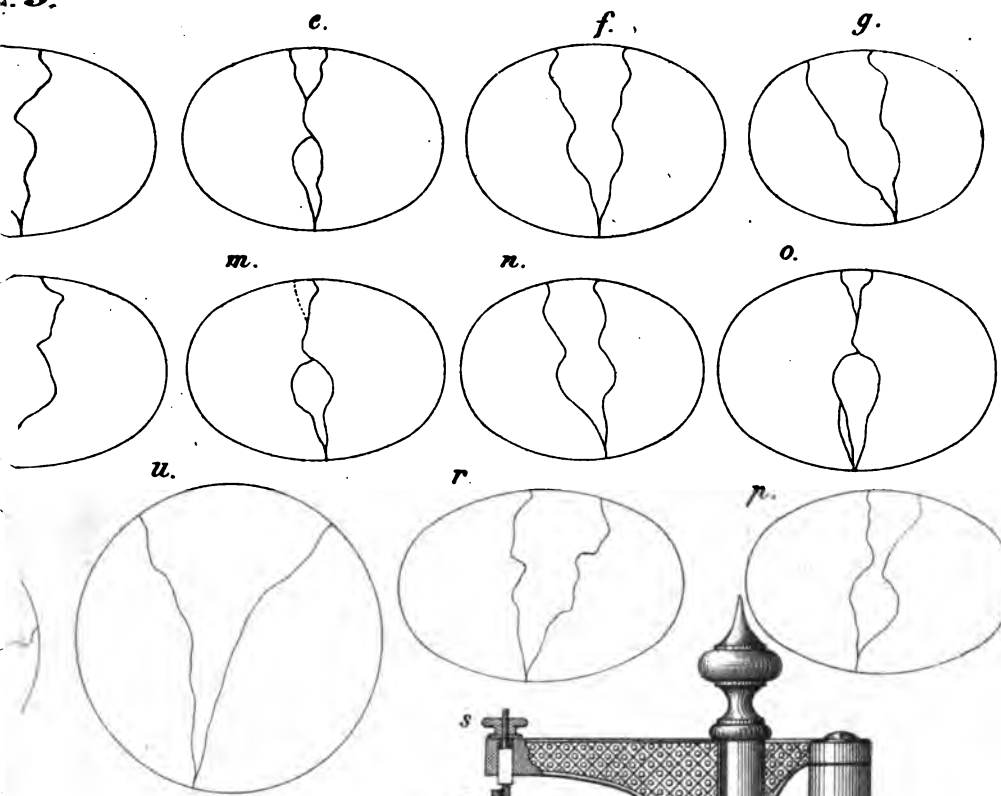

s Hygrometer.

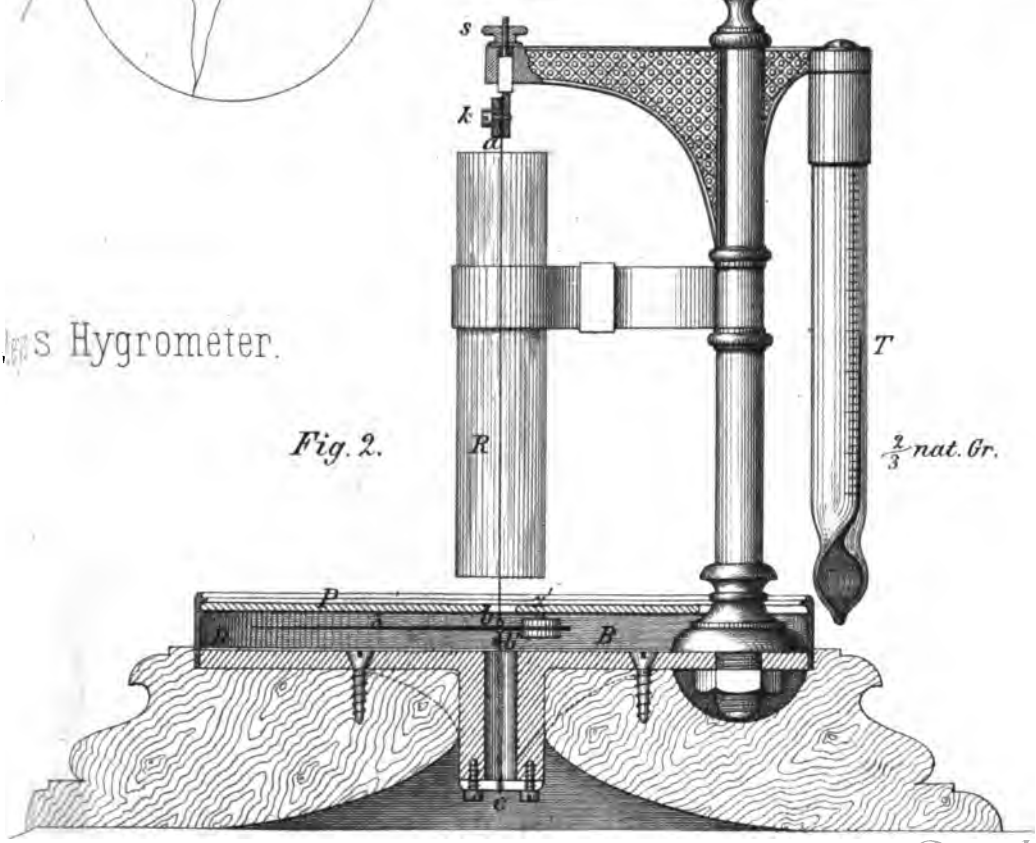

Fig. 2. $\frac{2}{3}$ *nat. Gr.*

Digitized by Google

Lith. Anst. v. Jos. Huber vorm. Joh. Meiser, München.

Digitized by Google

Digitized by Google

Ph. Carl's Repertorium Band 14.

Hängebögen von E. Schneider.

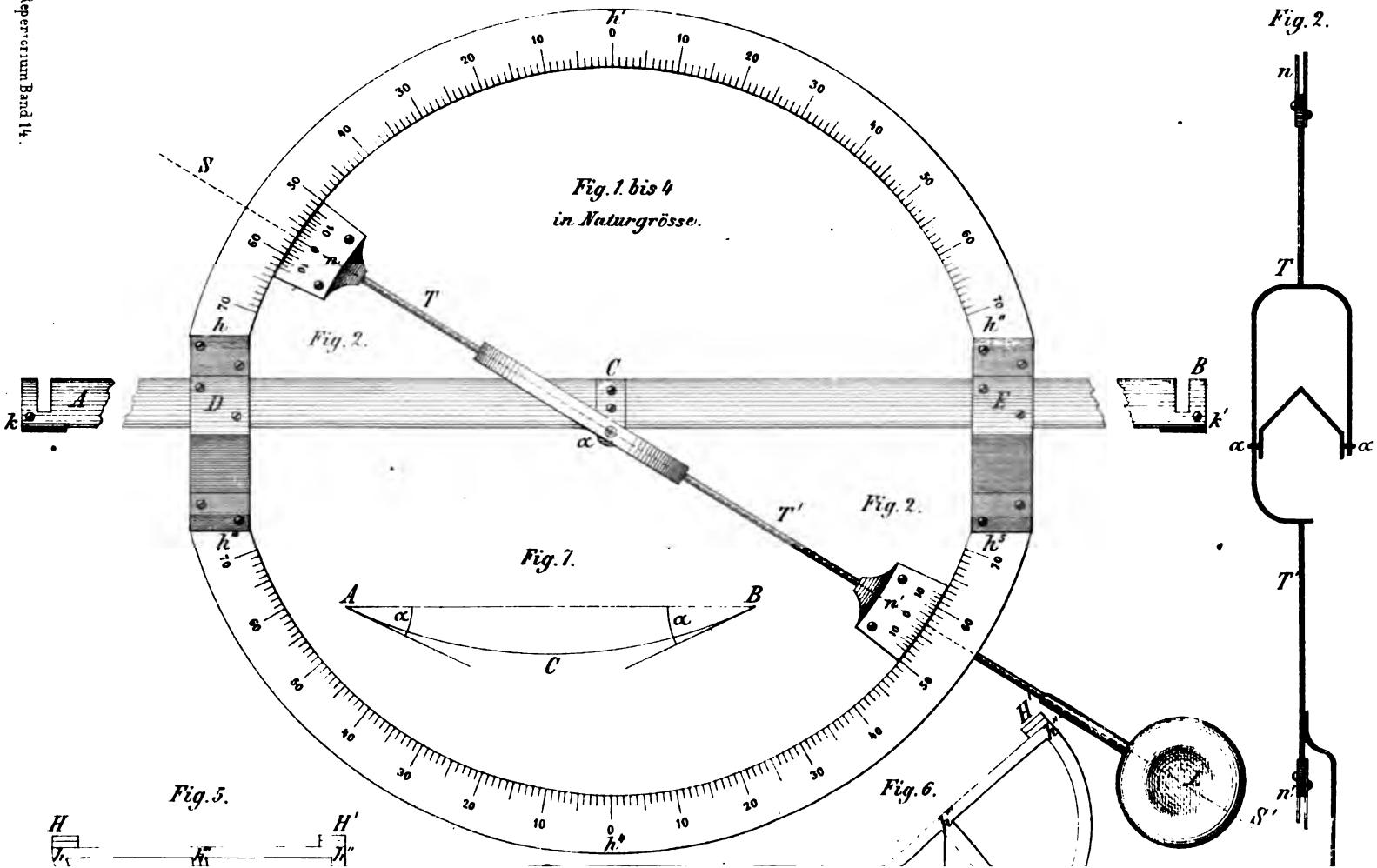

Digitized by Google

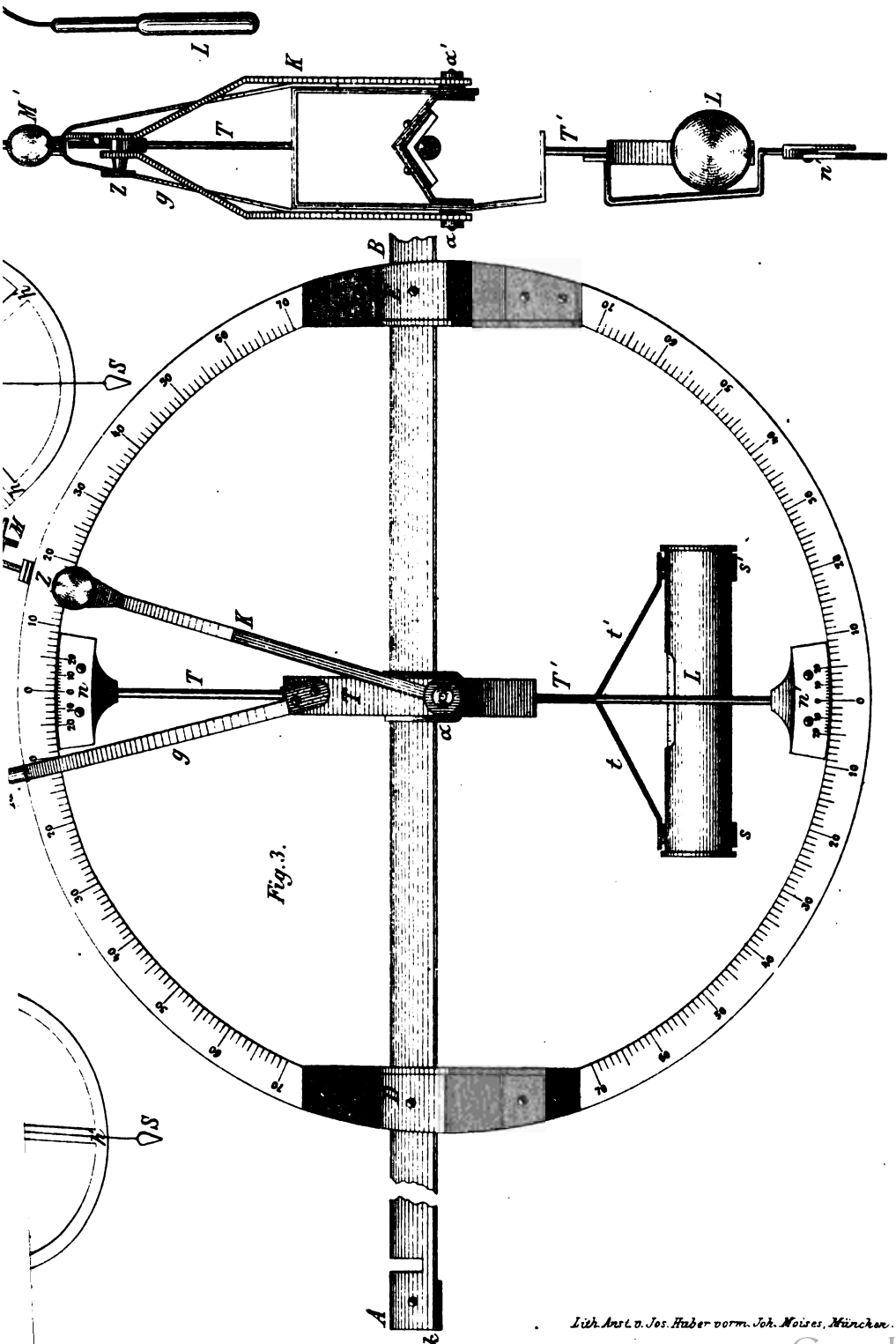

Lith. Anst. v. Jos. Haber vorm. Joh. Hoises, München.

Digitized by Google

Digitized by Google

Digitized by Google

Fig. 7.a

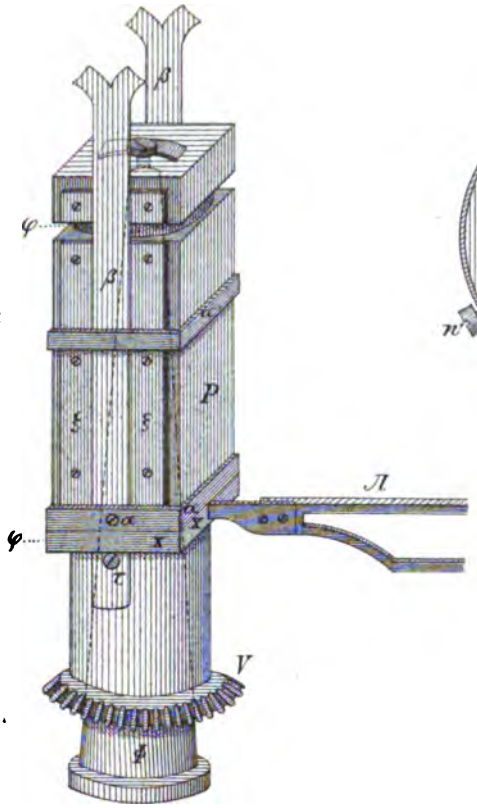

Fig. 8.

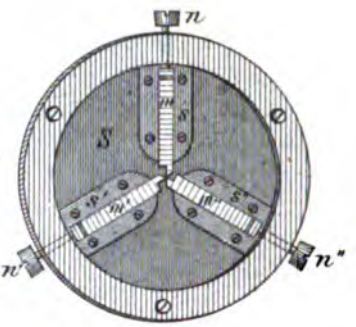

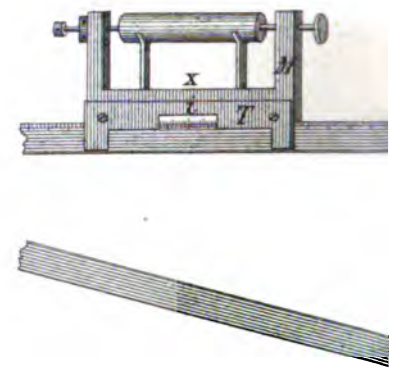

Fig. 1.

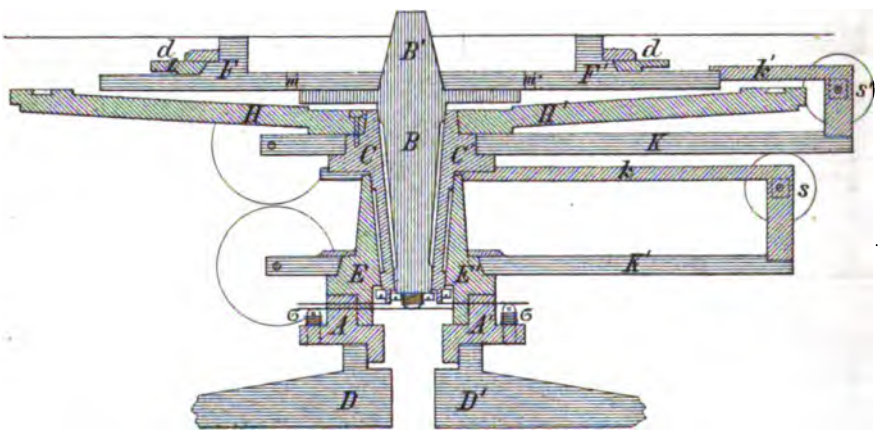

Digitized by Google

her Universaltheodolit

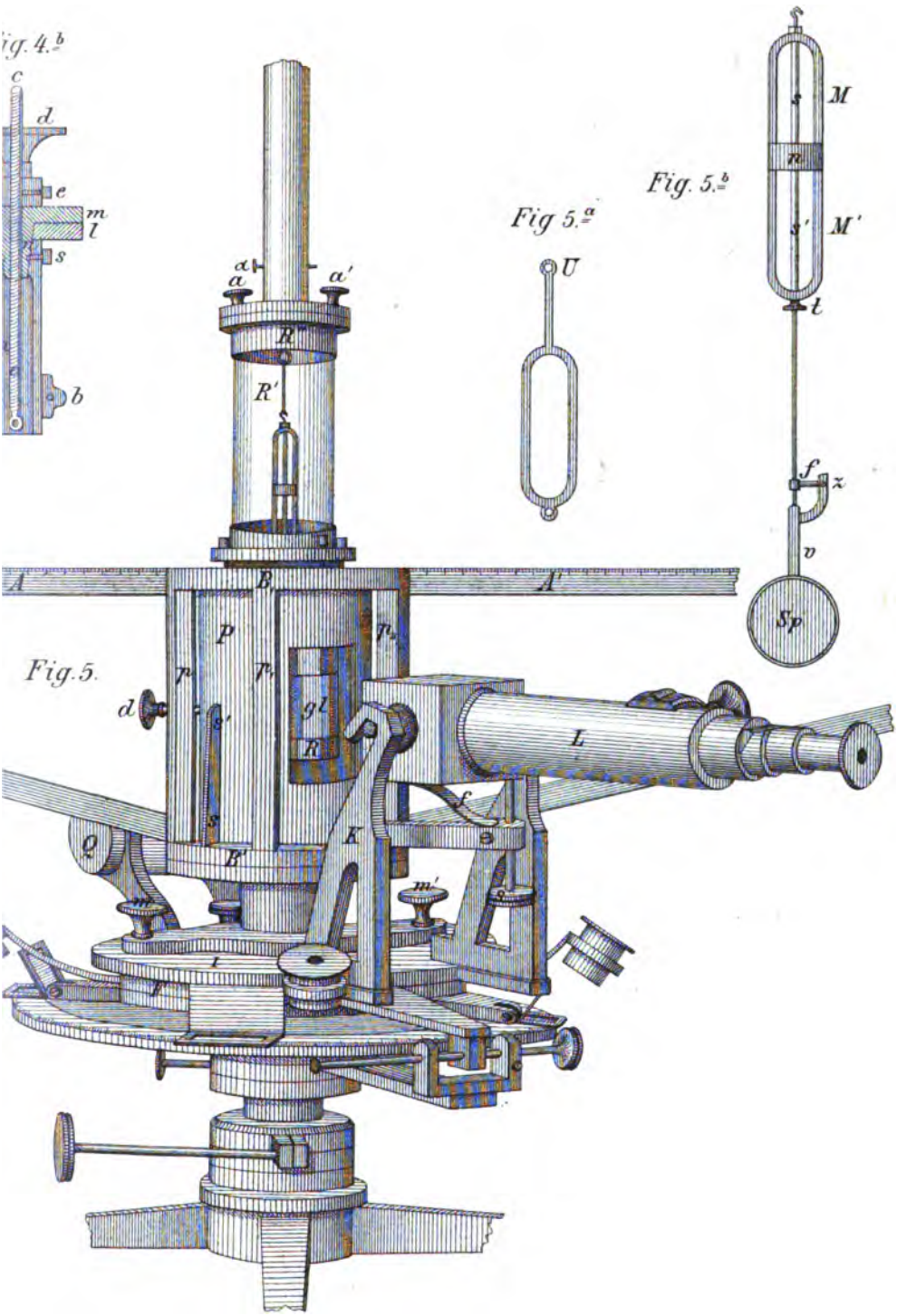

Lith. Anst. v. Jos. Huber vorm. Joh. Moises, München.

Digitized by Google

Digitized by Google

Digitized by Google

Fig. 2.

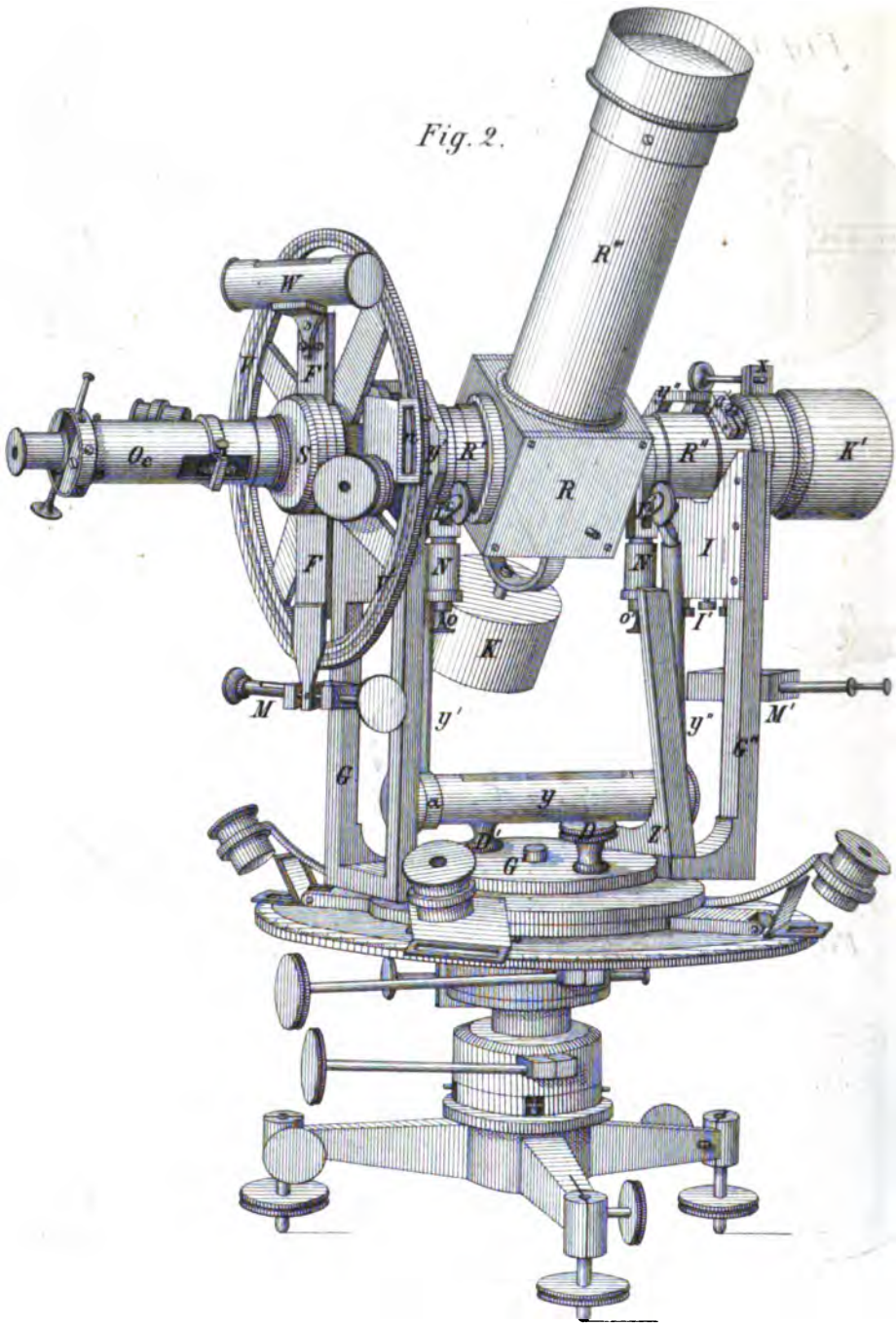

Digitized by Google

her Universaltheodolit.

Fig. 3.

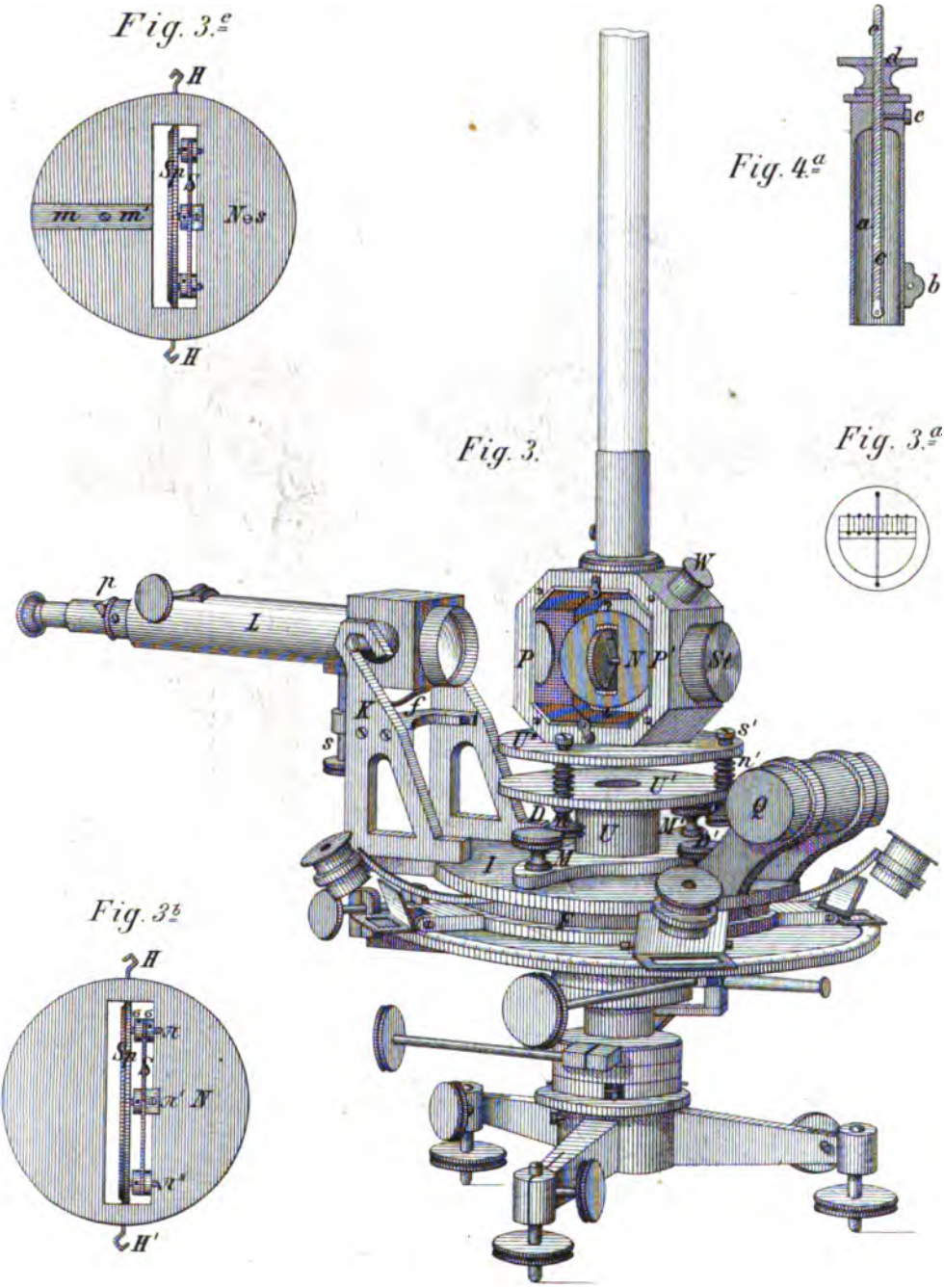

Fig. 3.a

Fig. 3.b

Fig. 3.c

Fig. 4.a

Lith. Anst. v. Jos. Huber vorm. Joh. Moses, München.

Digitized by Google

Digitized by Google

Digitized by Google

Fig 6.

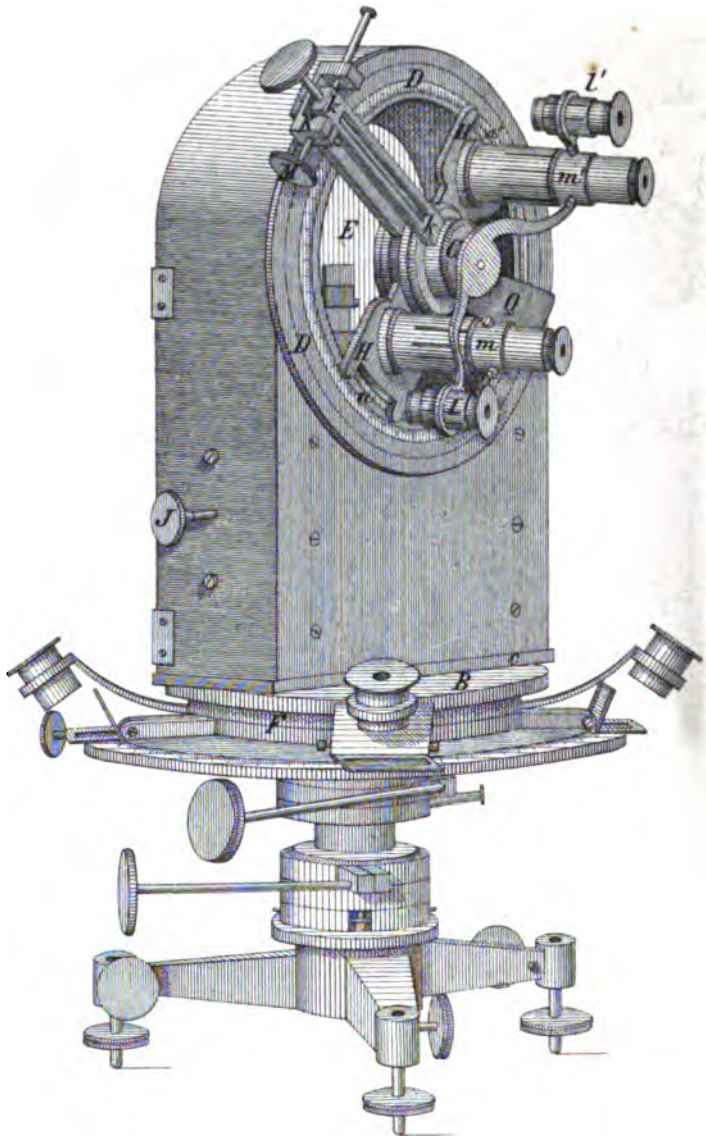

Digitized by Google

her Universaltheodolit.

Fig. 7.

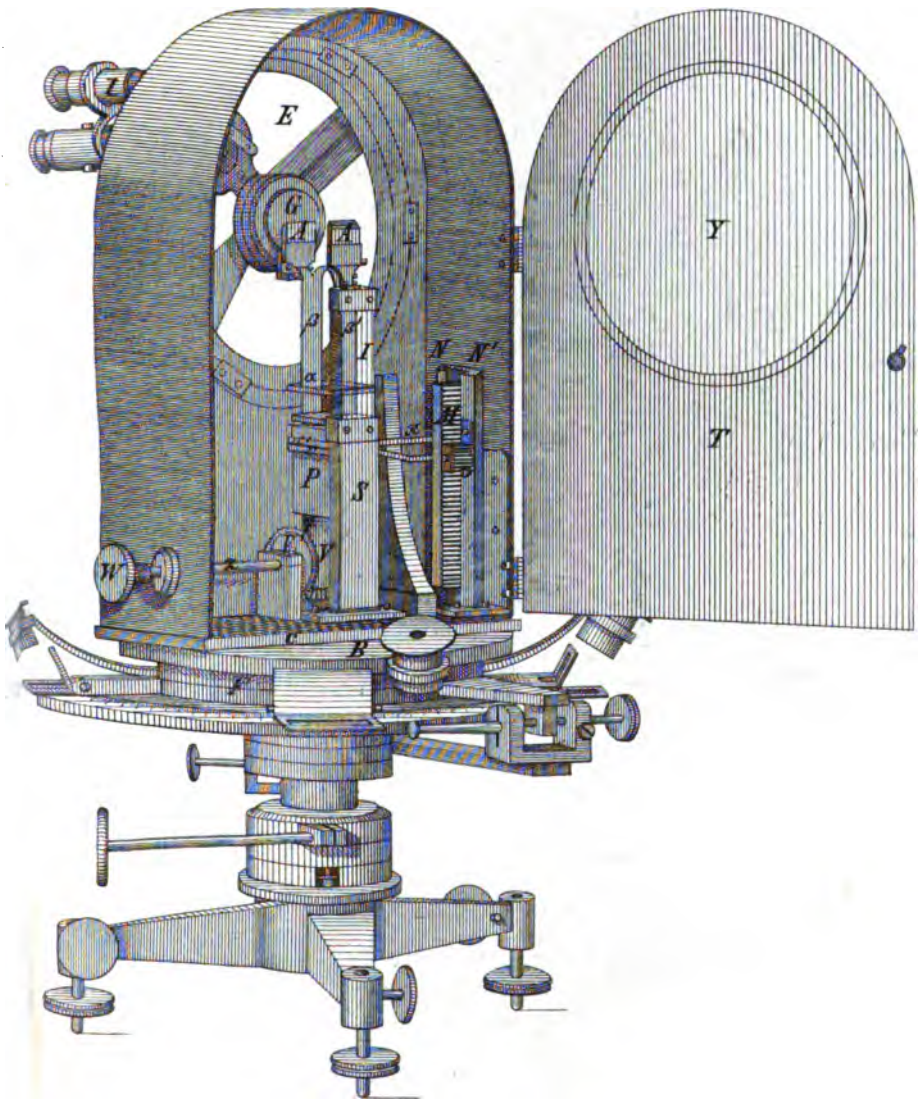

Lith. Anst. v. Jos. Huber vorm. Jos. Rauch, München.

Digitized by Google

Digitized by Google

Digitized by Google

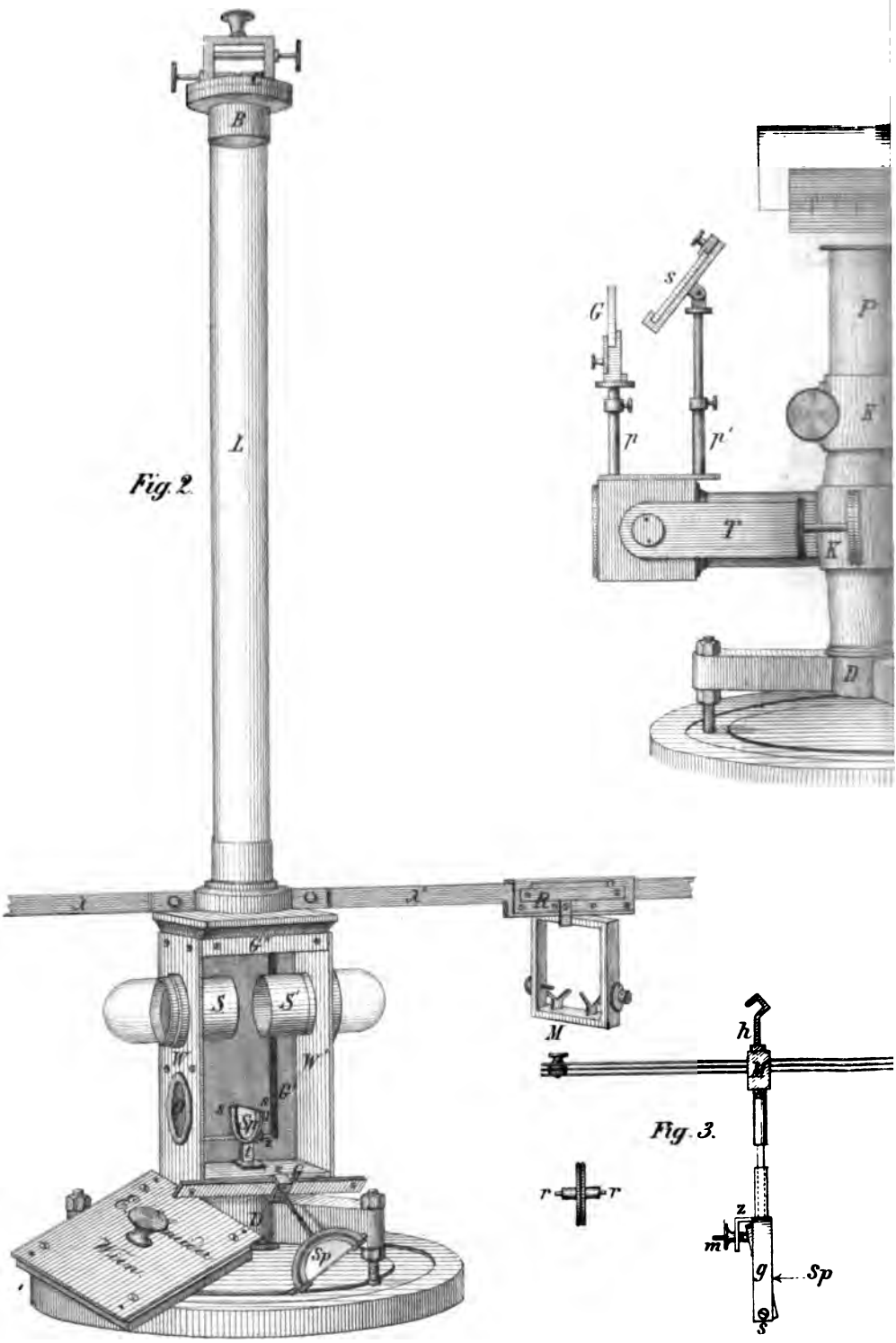

Digitized by Google

Fig 1.

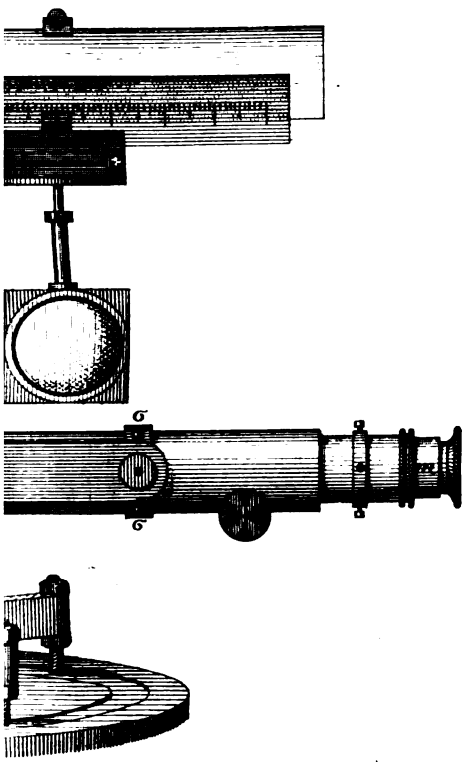

Fig. 4.

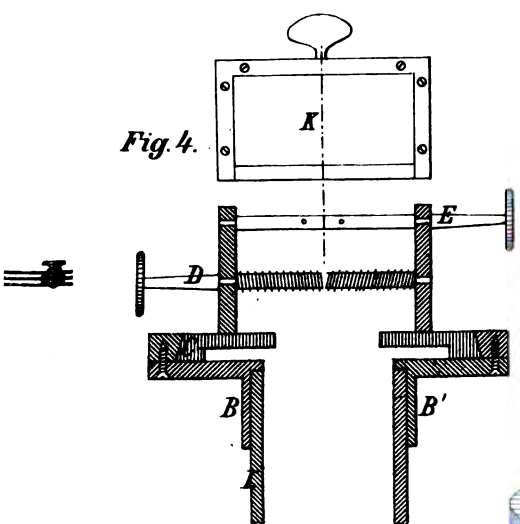

Fig. 5.

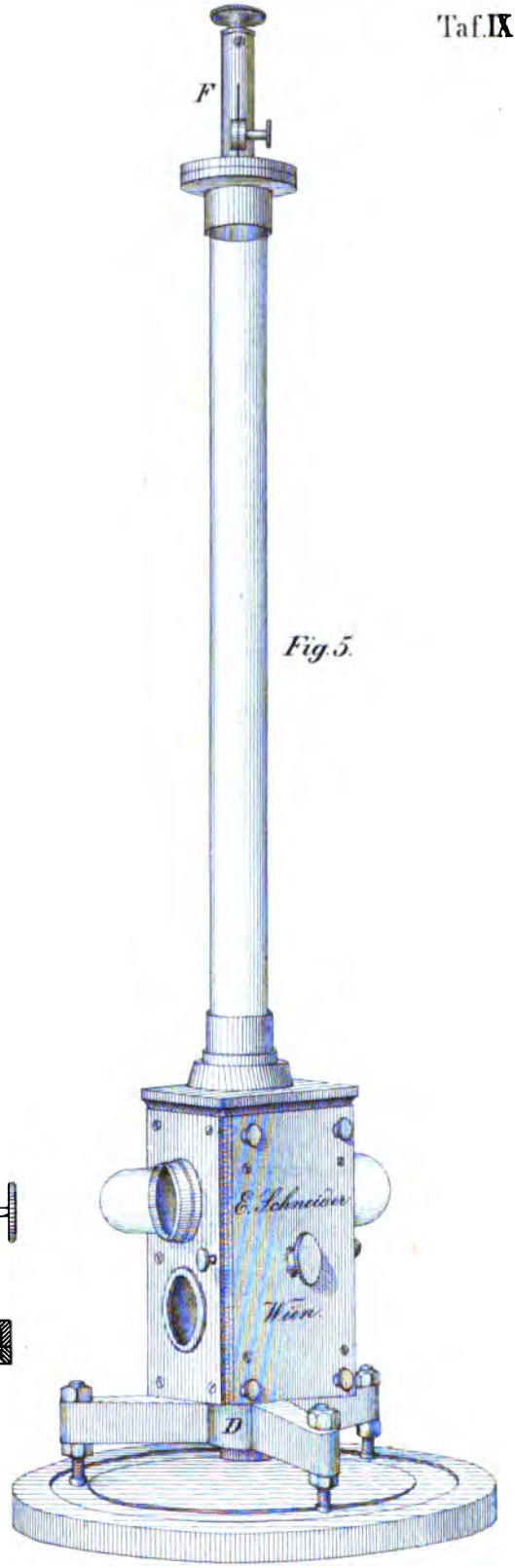

Lith. Anst. v Jos Huber vorm. Joh. Mayer, München.

Digitized by Google

Digitized by Google

Digitized by Google

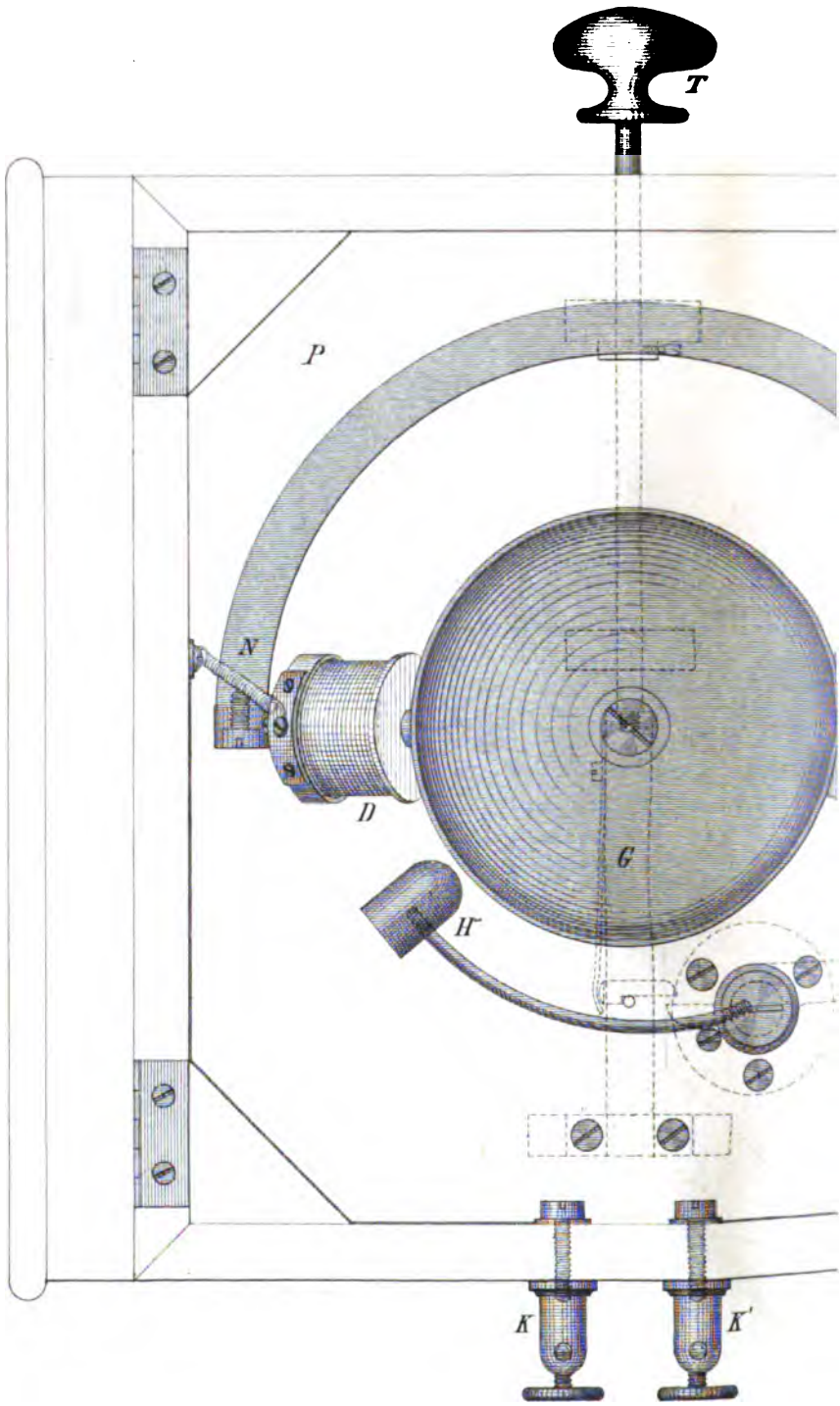

Digitized by Google

Telephon von W. E. Fein.

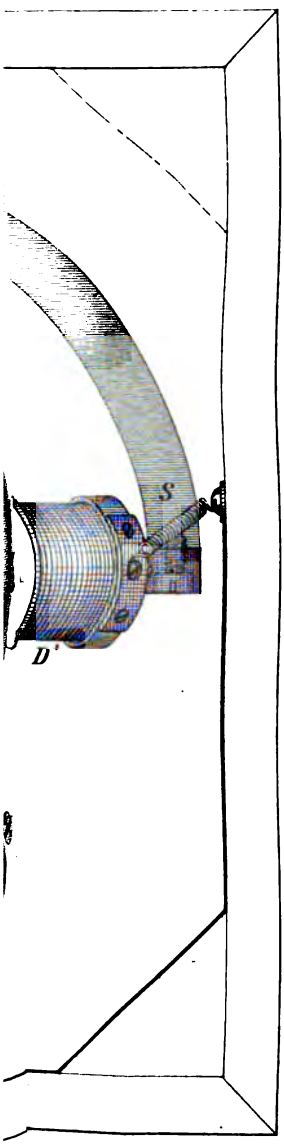

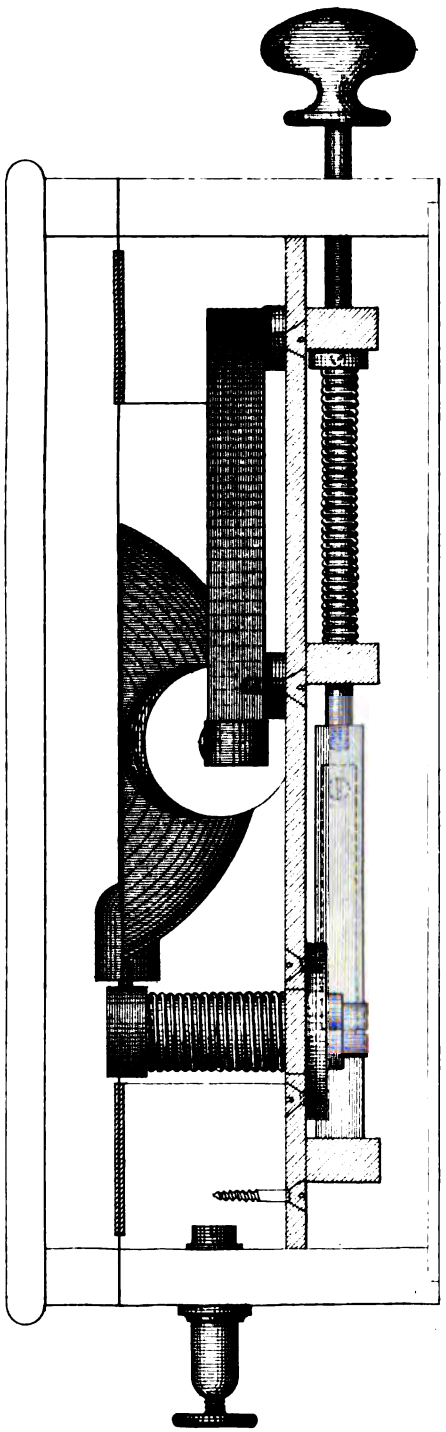

Digitized by Google

Digitized by Google

Digitized by Google

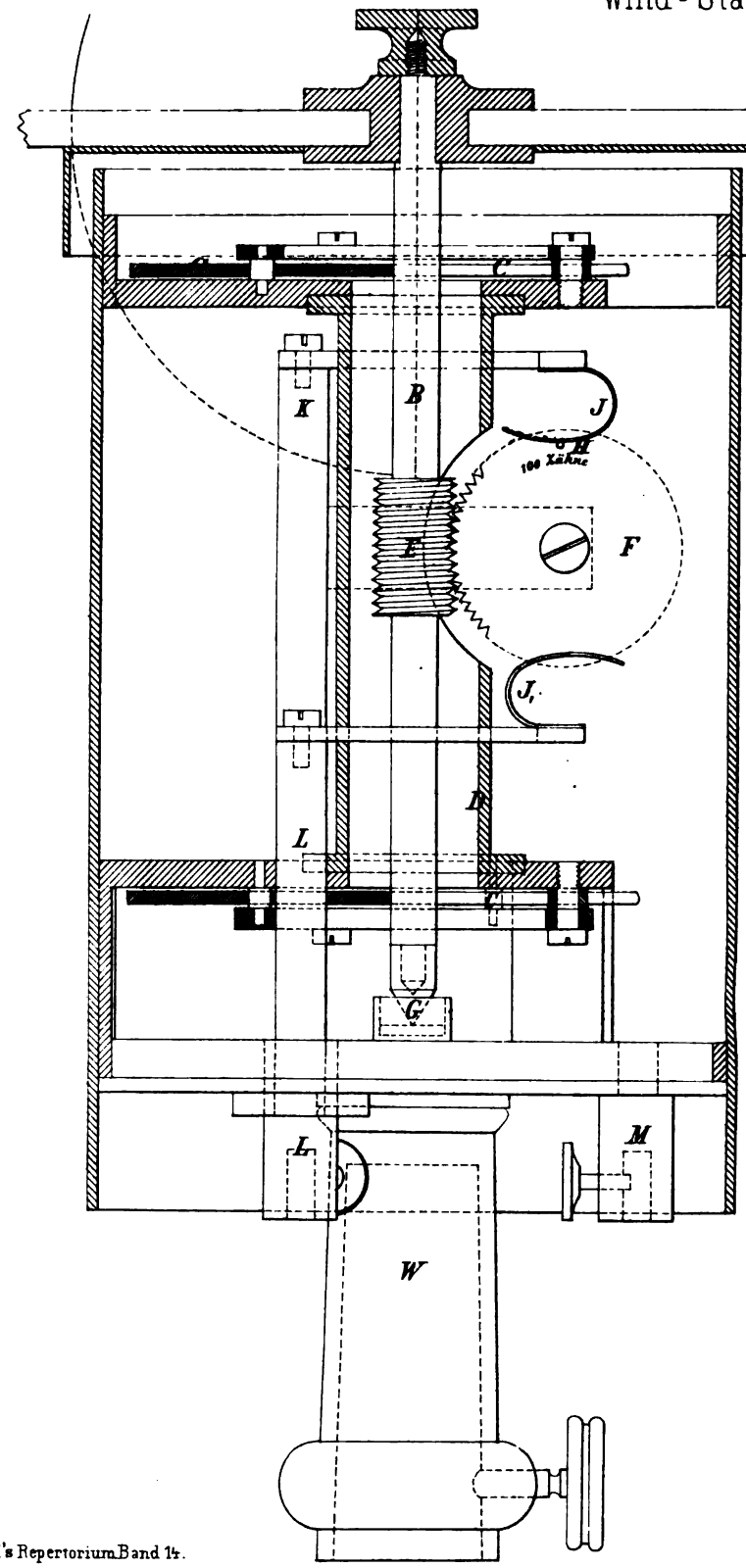

Fig. 1.

Digitized by Google

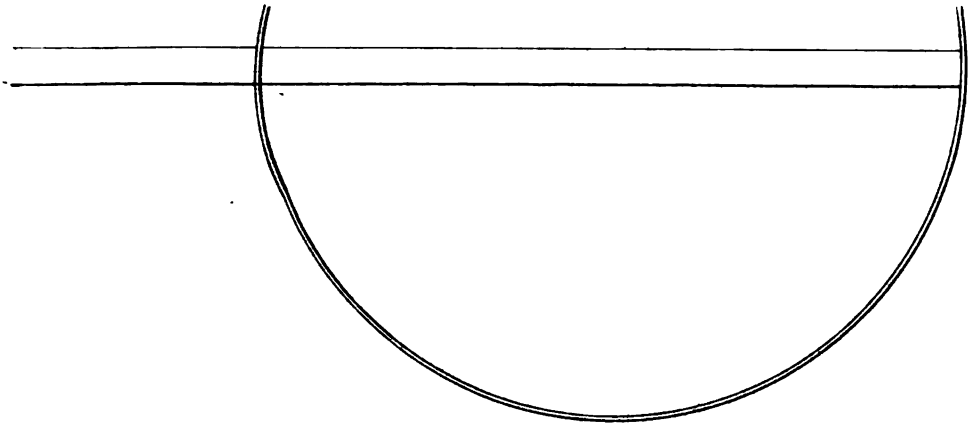

Fig. 2.

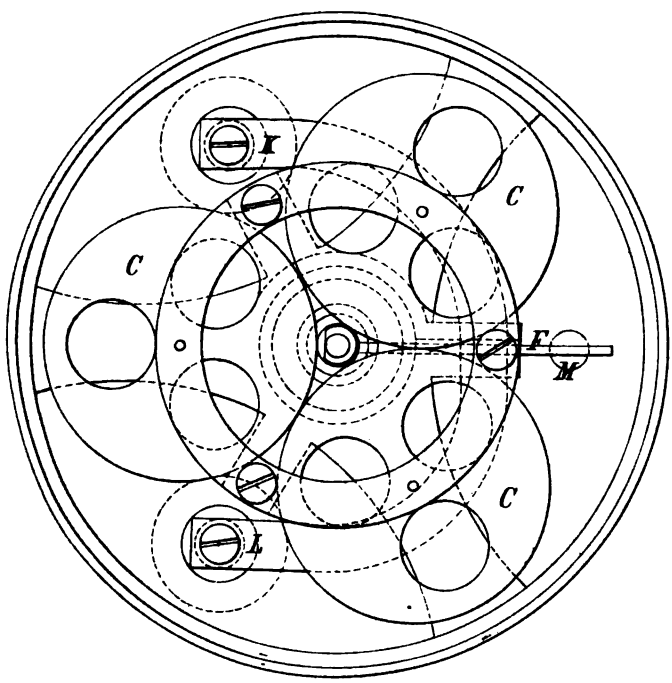

Lith. Anst. v. Jos. Huber vorm. Joh. Moises, München.

Digitized by Google

Digitized by Google

Digitized by Google

Wind-Stärke-Messer mit electrischem Zählwerk

const. v. P. Schultze in Dorpat.

Fig. 1.

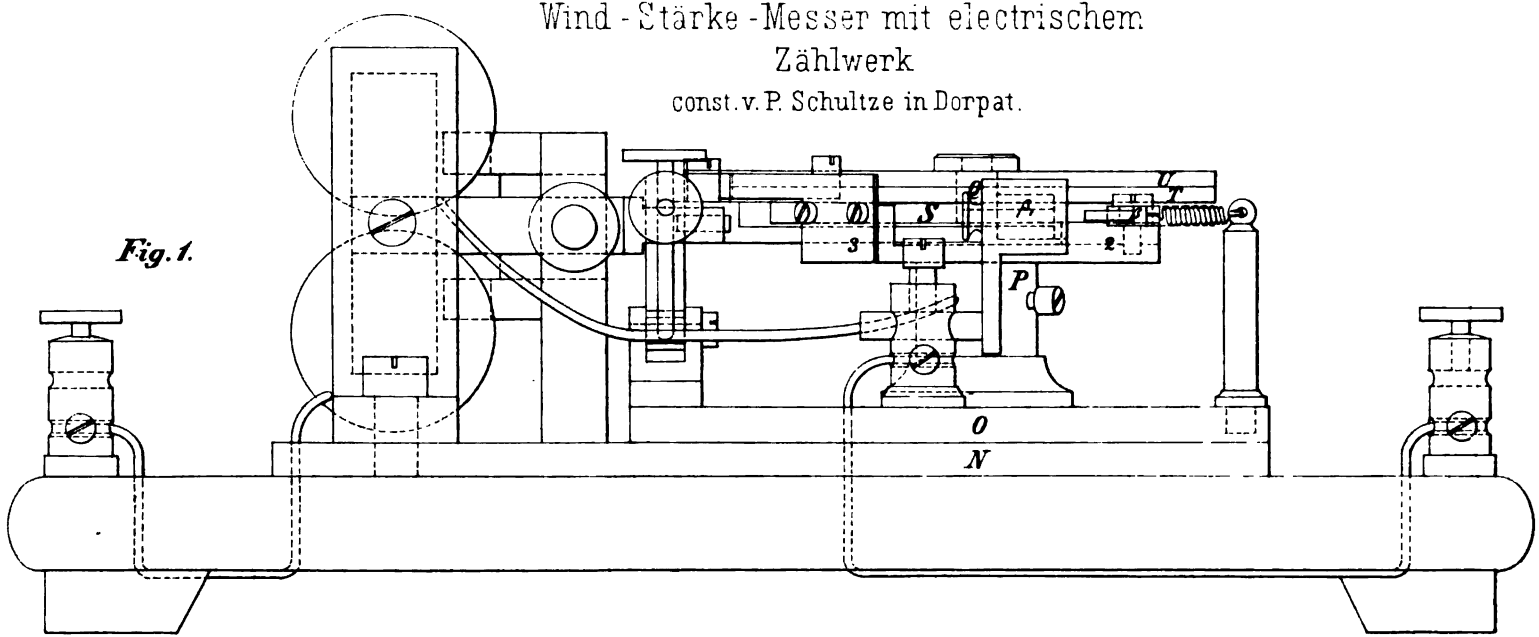

Fig. 2.

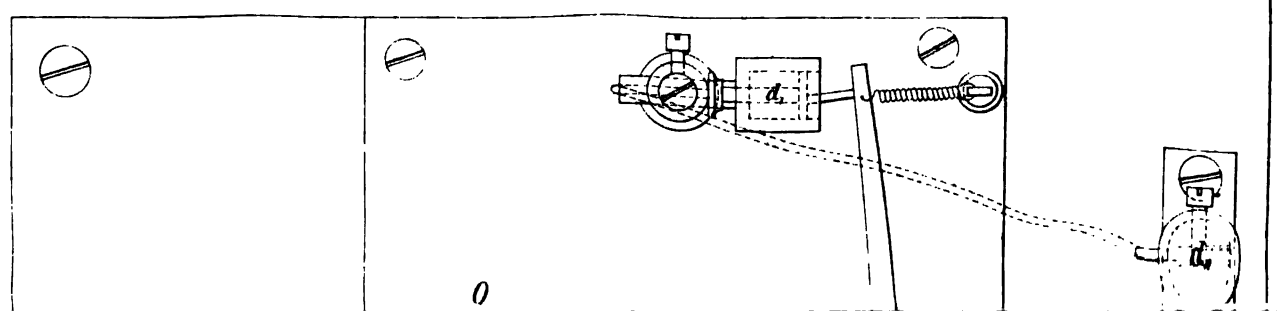

Digitized by Google

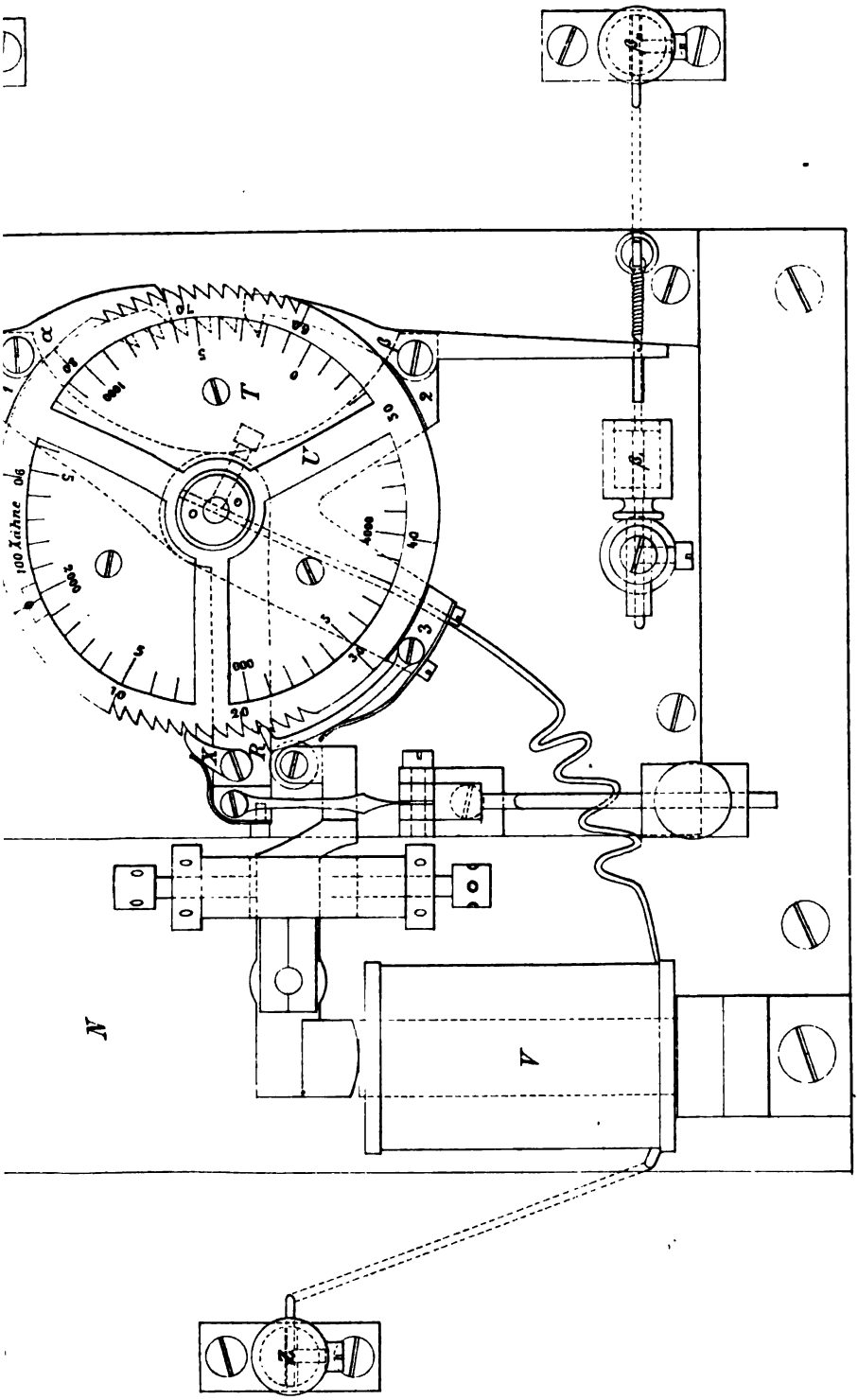

Lith. Anst. v. Jos. Huber vorm. Joh. Moises Mannh.

Digitized by Google

Digitized by Google

Digitized by Google

Telephon-Signalapparat von J. Puluj.

Fig. 1.

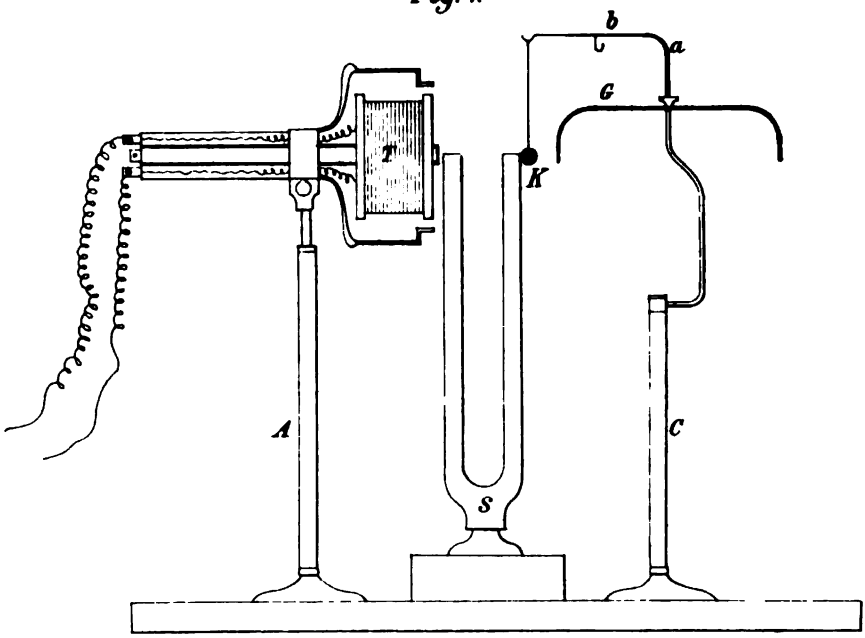

Fig. 2.

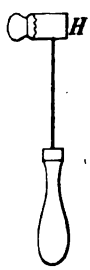

Fig. 3.

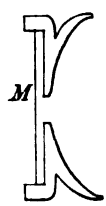

Fig. 4.

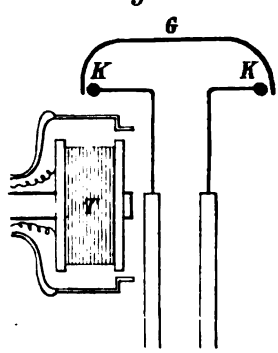

Digitized by Google

Meyerstein's Apparat zur Bestimmung der Brennweite sphärischer Linsen.

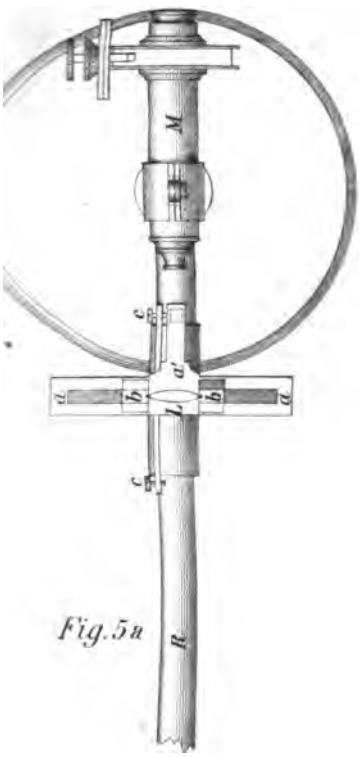

Fig. 5a

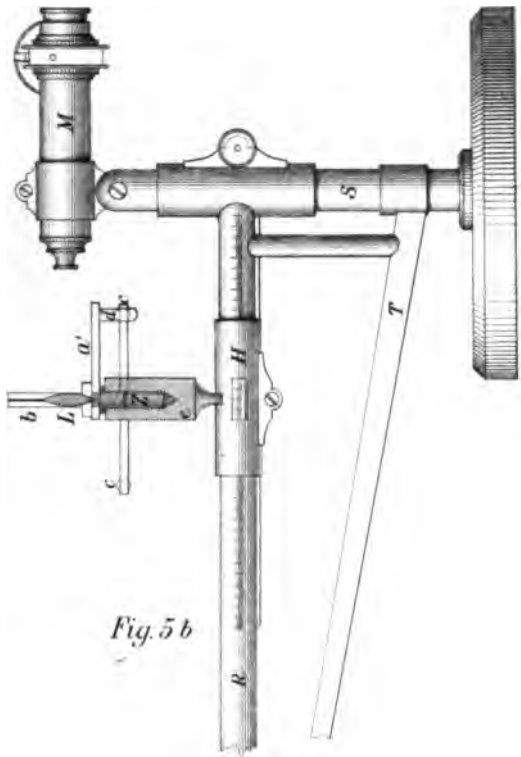

Fig. 5b

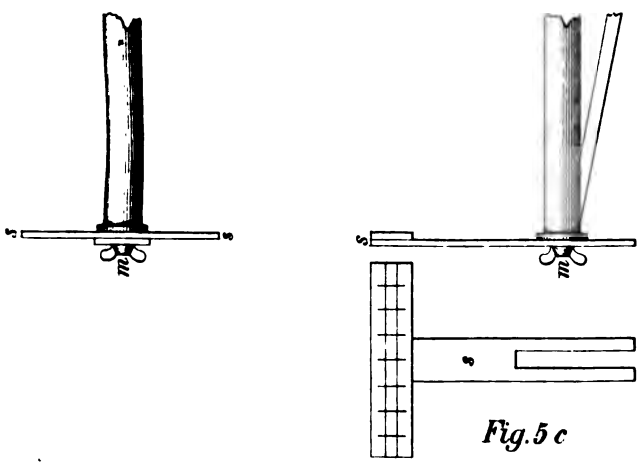

Fig. 5c

Lith. Anst. v. Jos. Huber vorm. Joh. Mayer, München.

Digitized by Google

Digitized by Google

Digitized by Google

Fig. 2.

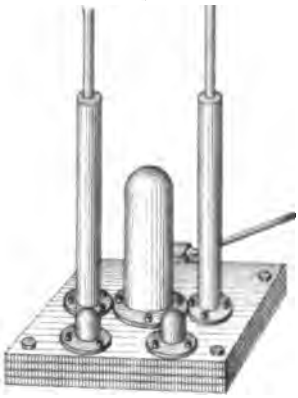

Fig. 3.

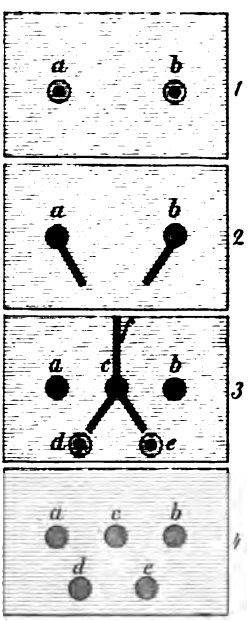

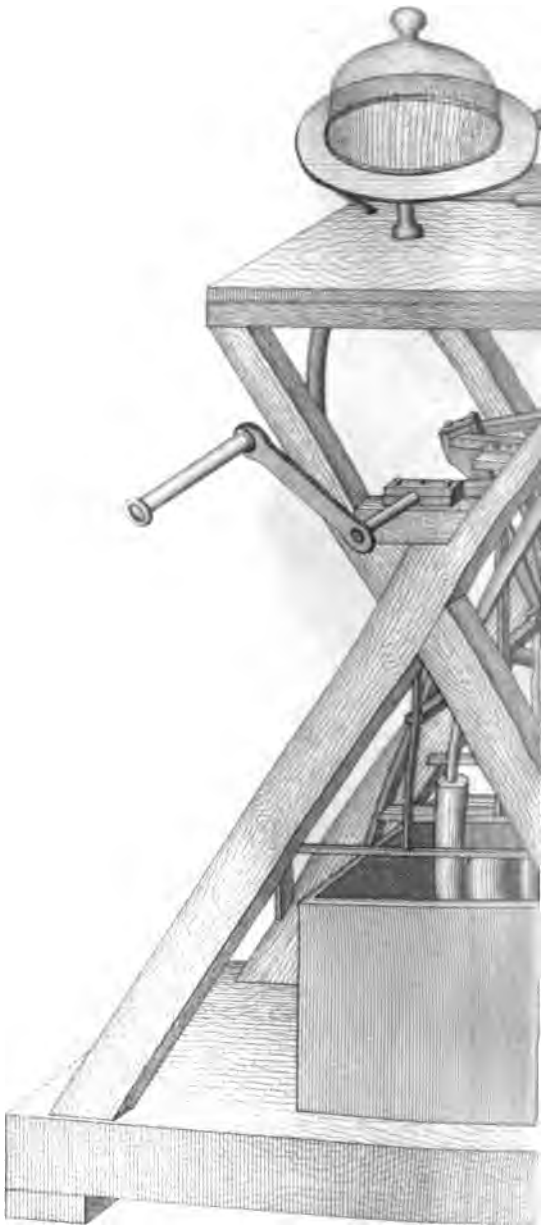

Digitized by Google

namische Luftpumpe.

1.

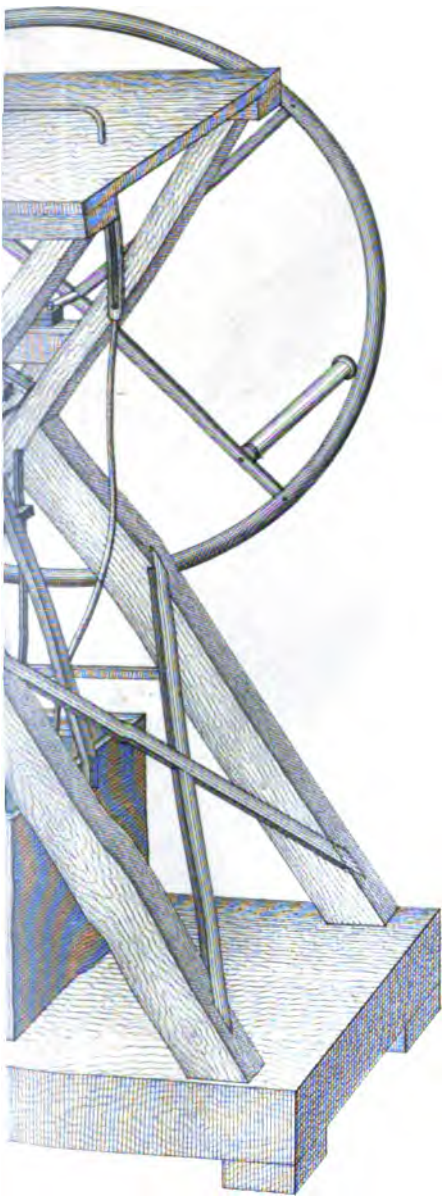

Fig. 4.

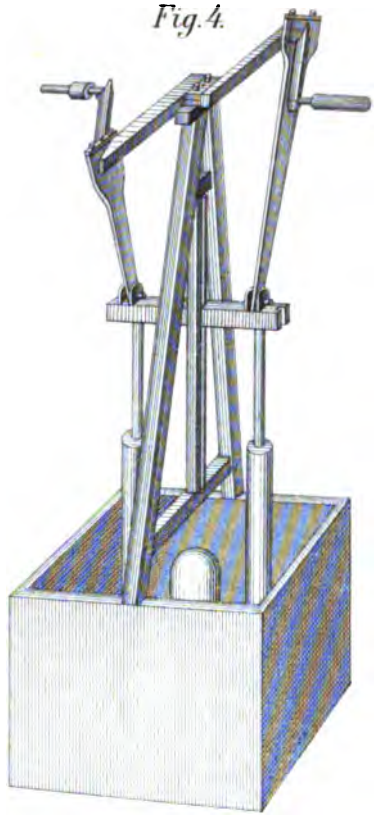

Fig. 5.

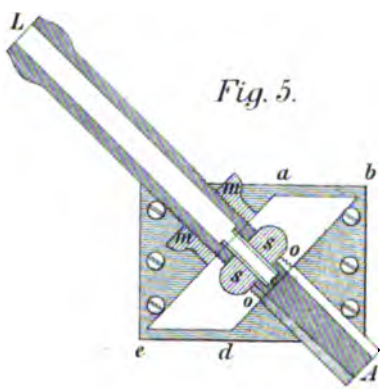

Lith. Anst. v. Jos. Huber vorm. Joh. Mosers, Munchen.

Digitized by Google

Digitized by Google

Digitized by Google

Fig.3a

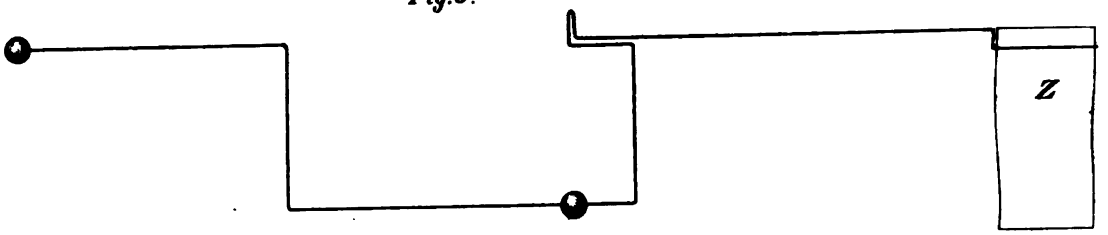

Fig.3b

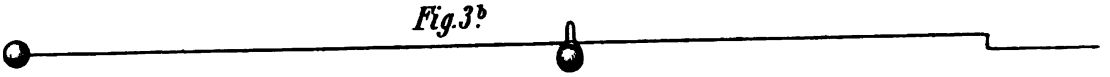

Fig.1.

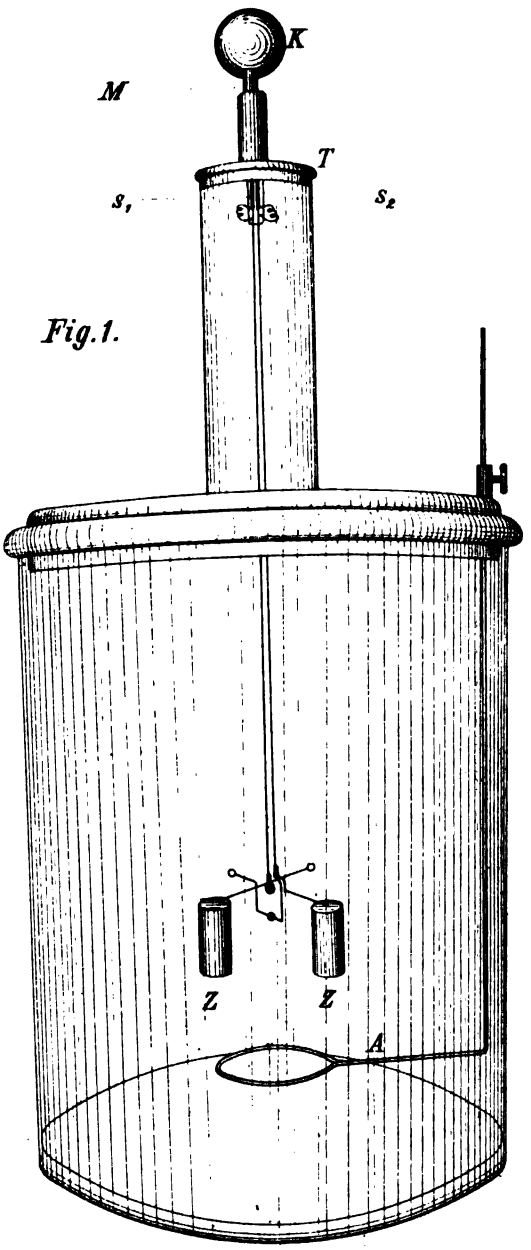

Fig.2a

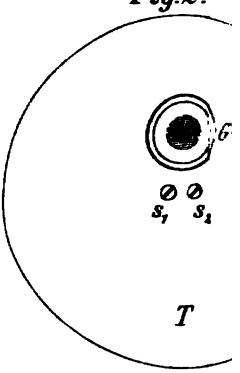

Fig.2b

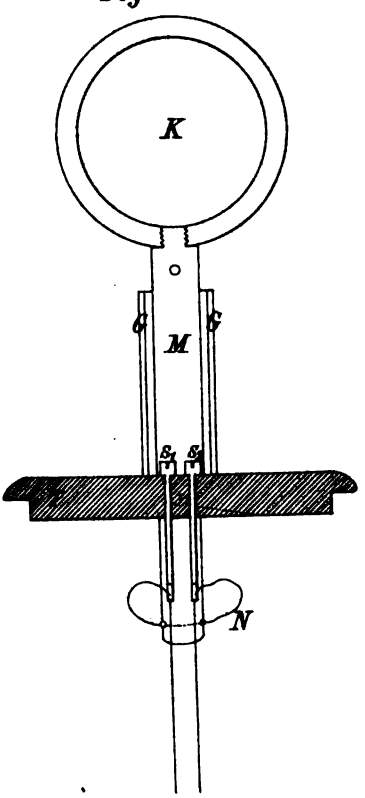

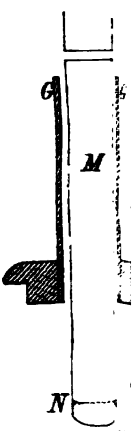

Digitized by Google

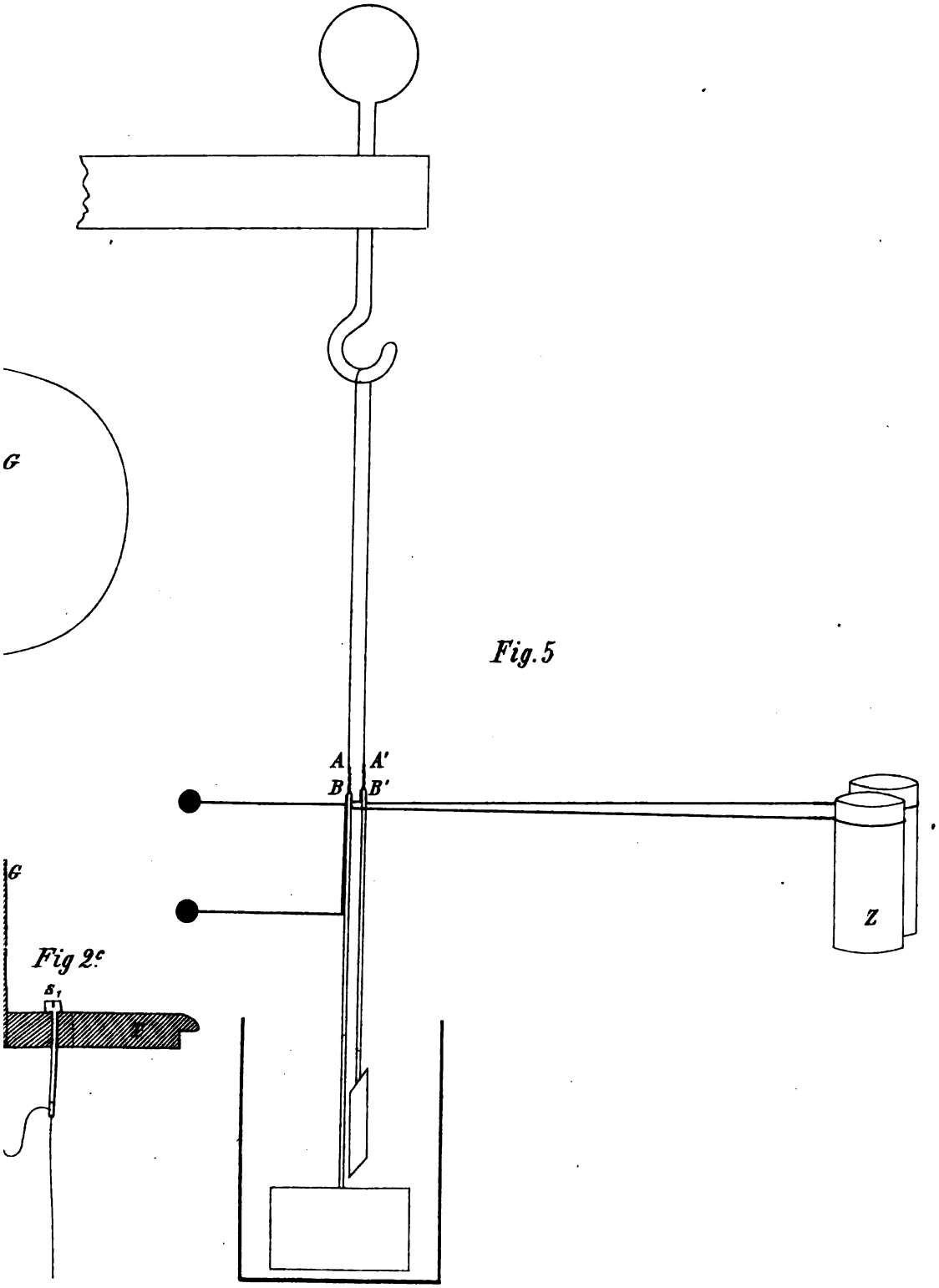

Fig. 5

Fig 2c

Lith. Anst. v. Jos. Huber vorm. Joh. Moises, München

Digitized by Google

Digitized by Google

Digitized by Google

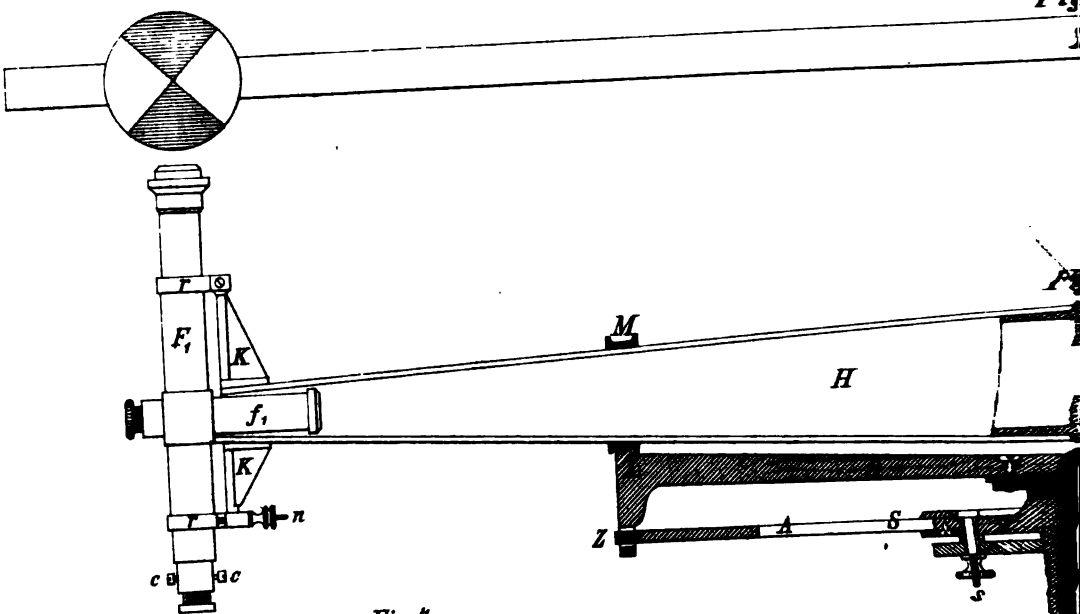

Fig. 4.

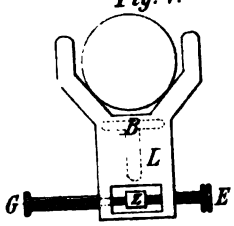

Fig. 3.

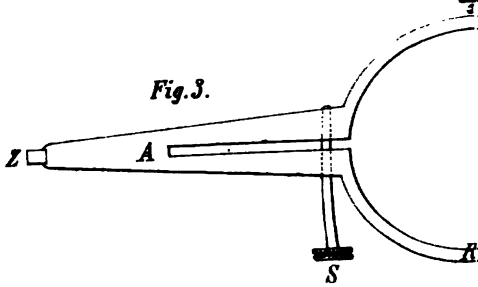

Fig 2.

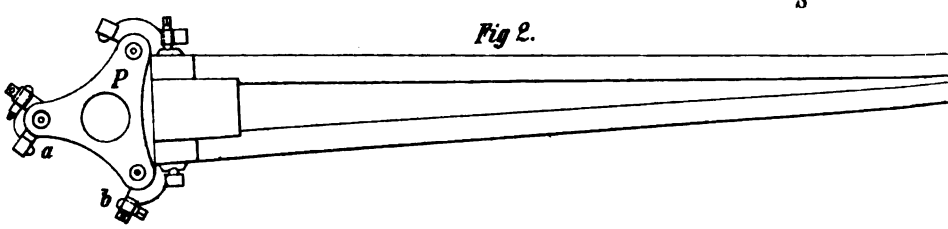

Fig. 6

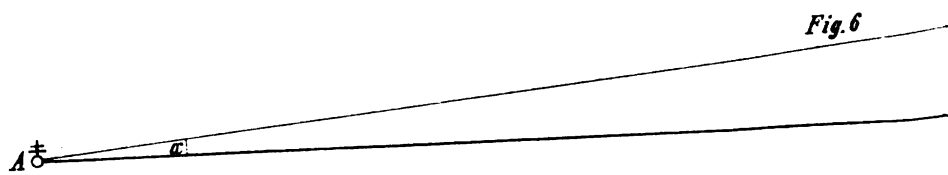

Digitized by Google

es Obersten J. Rosskiewicz.

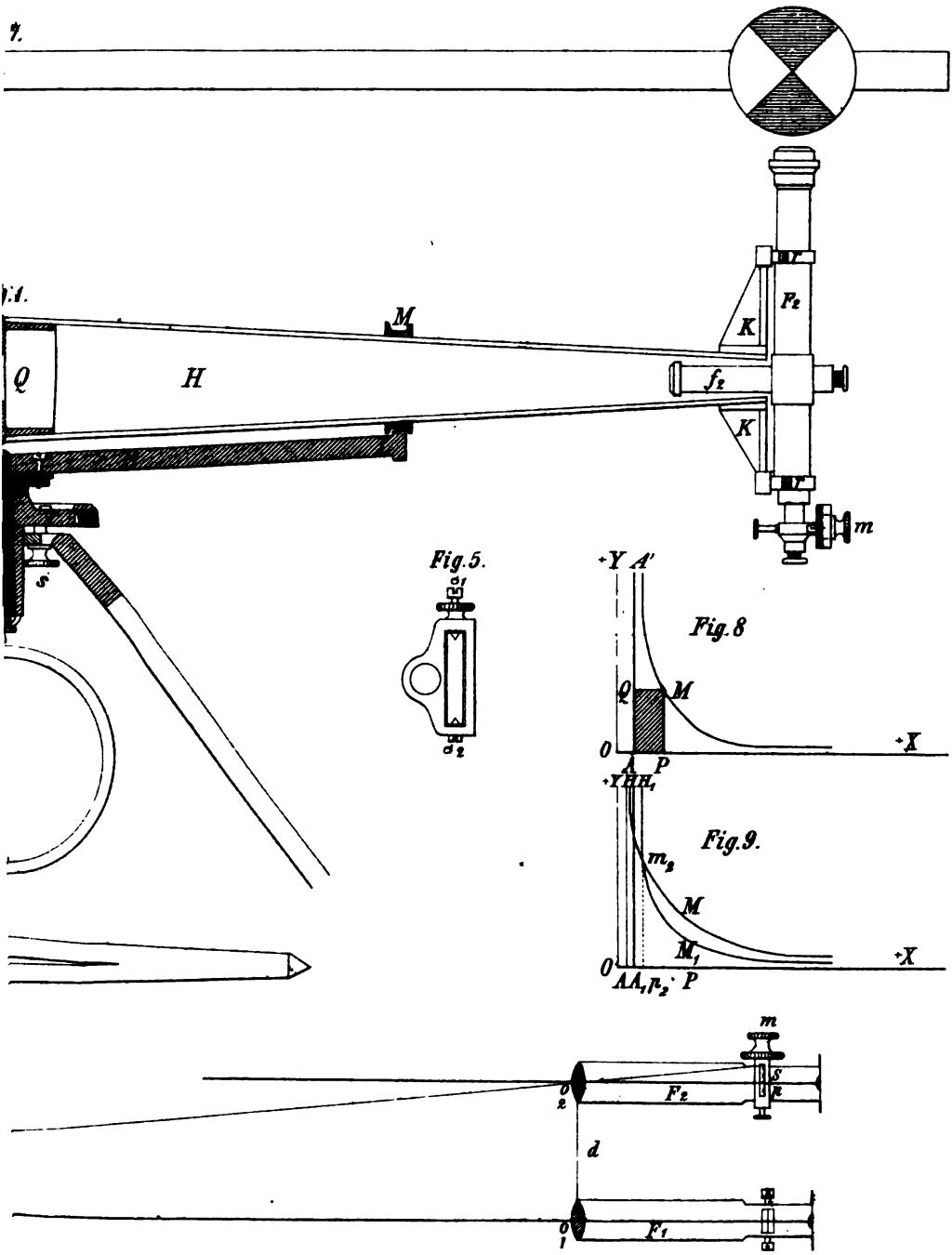

Lith Anst v Jos Huber vorm Joh Moses, München

Digitized by Google

Digitized by Google

Digitized by Google

P. Schreiber's Barothermograph.

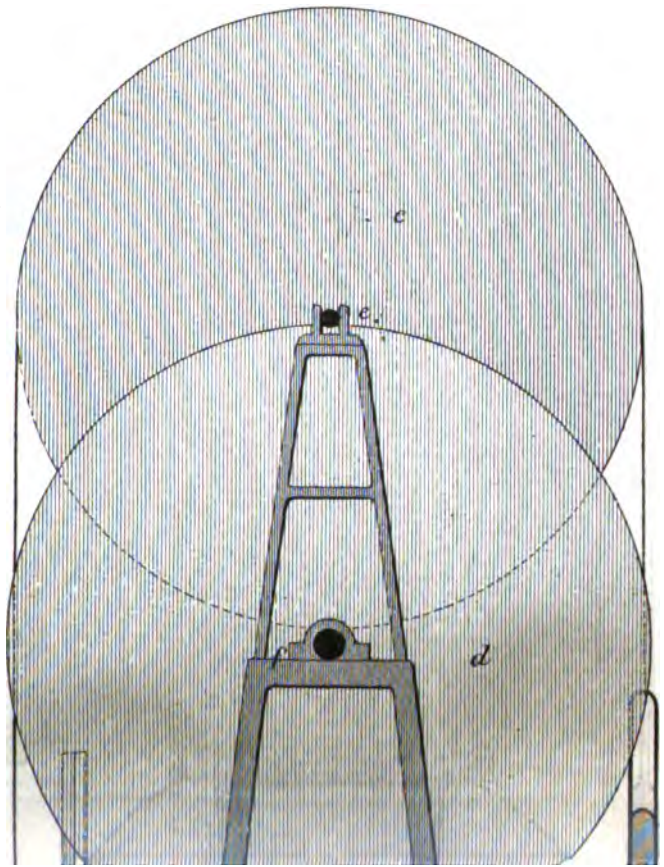

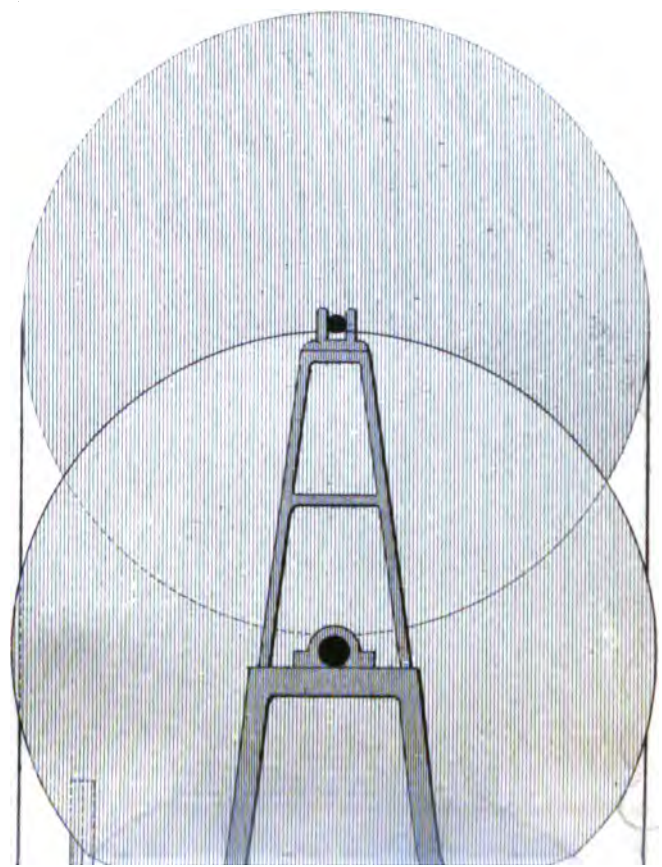

Digitized by Google

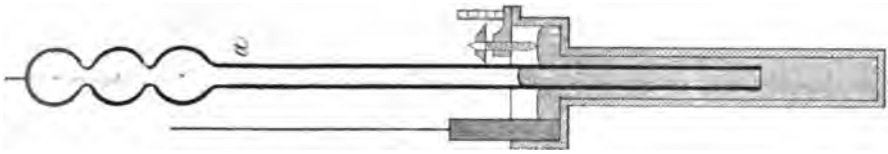

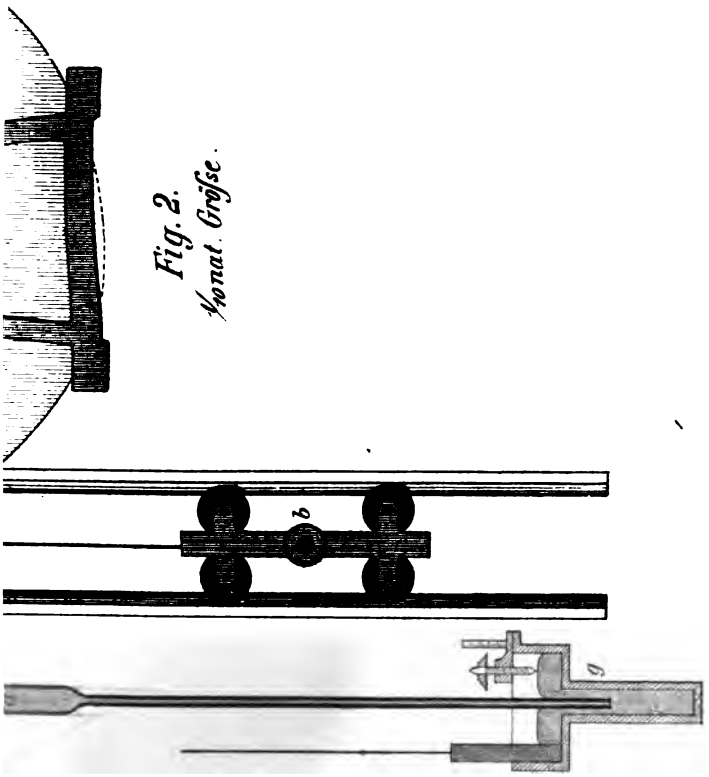

Fig. 2.
½nat. Grösse.

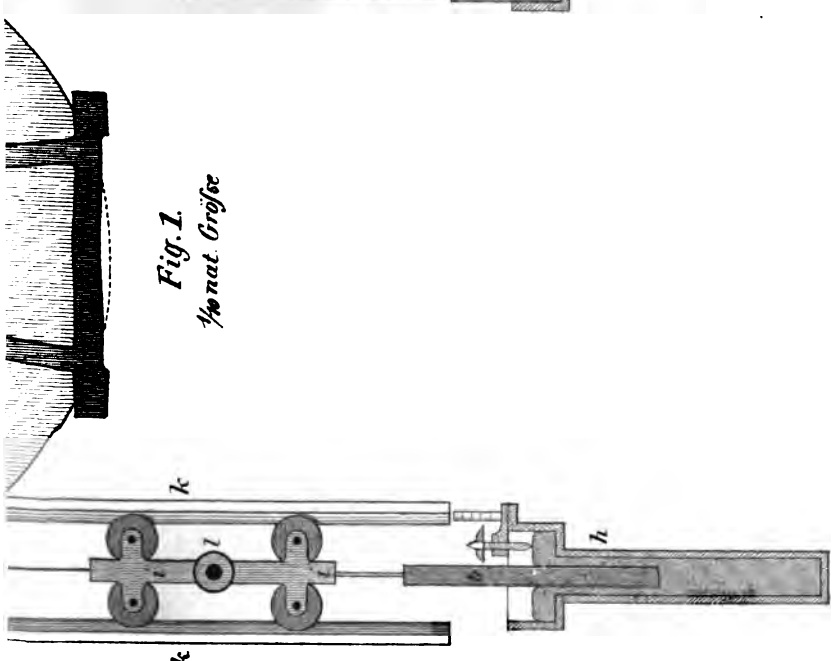

Fig. 1.
½nat. Grösse

Lith. Anst. v. Jos. Huber vorm. Joh. Moises in München.

Digitized by Google

Digitized by Google

Digitized by Google

P. Schreiber's Barothermograph.

Fig. 4.

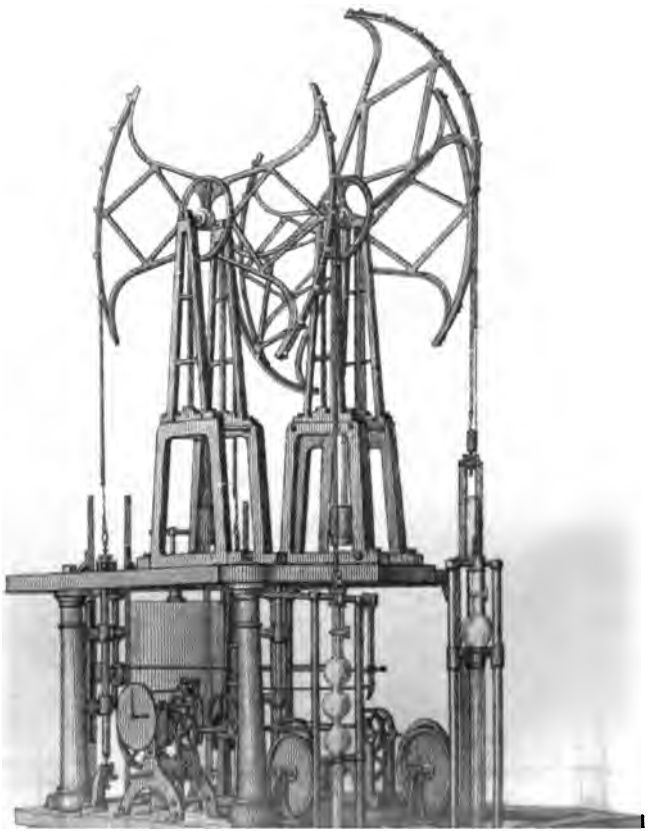

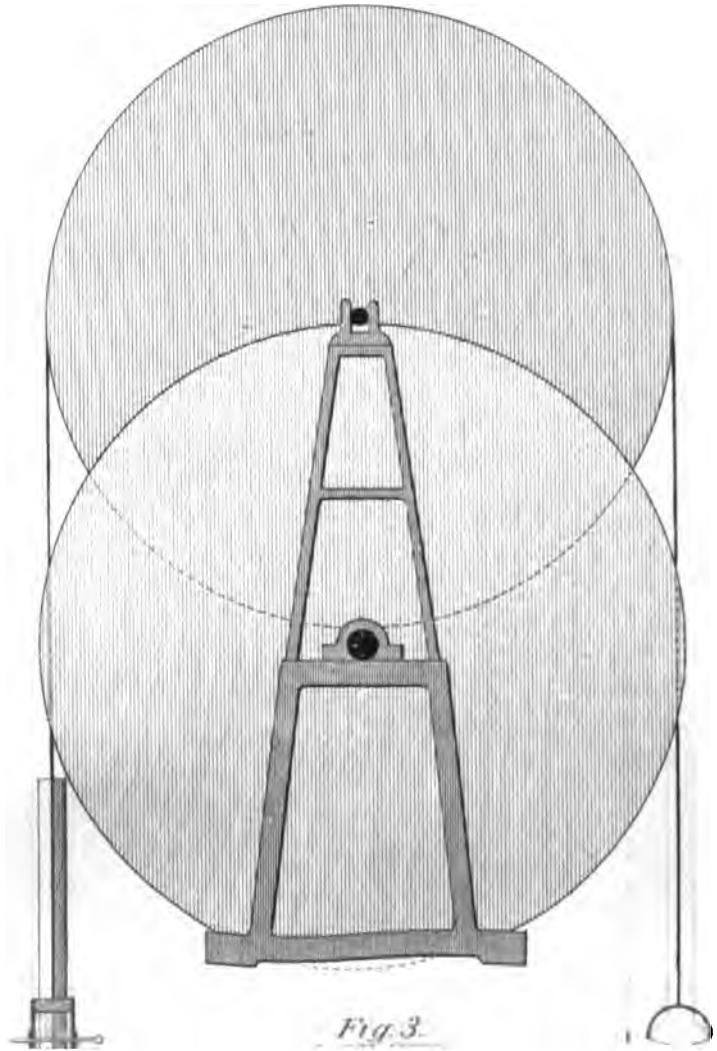

Fig. 3.

Digitized by Google

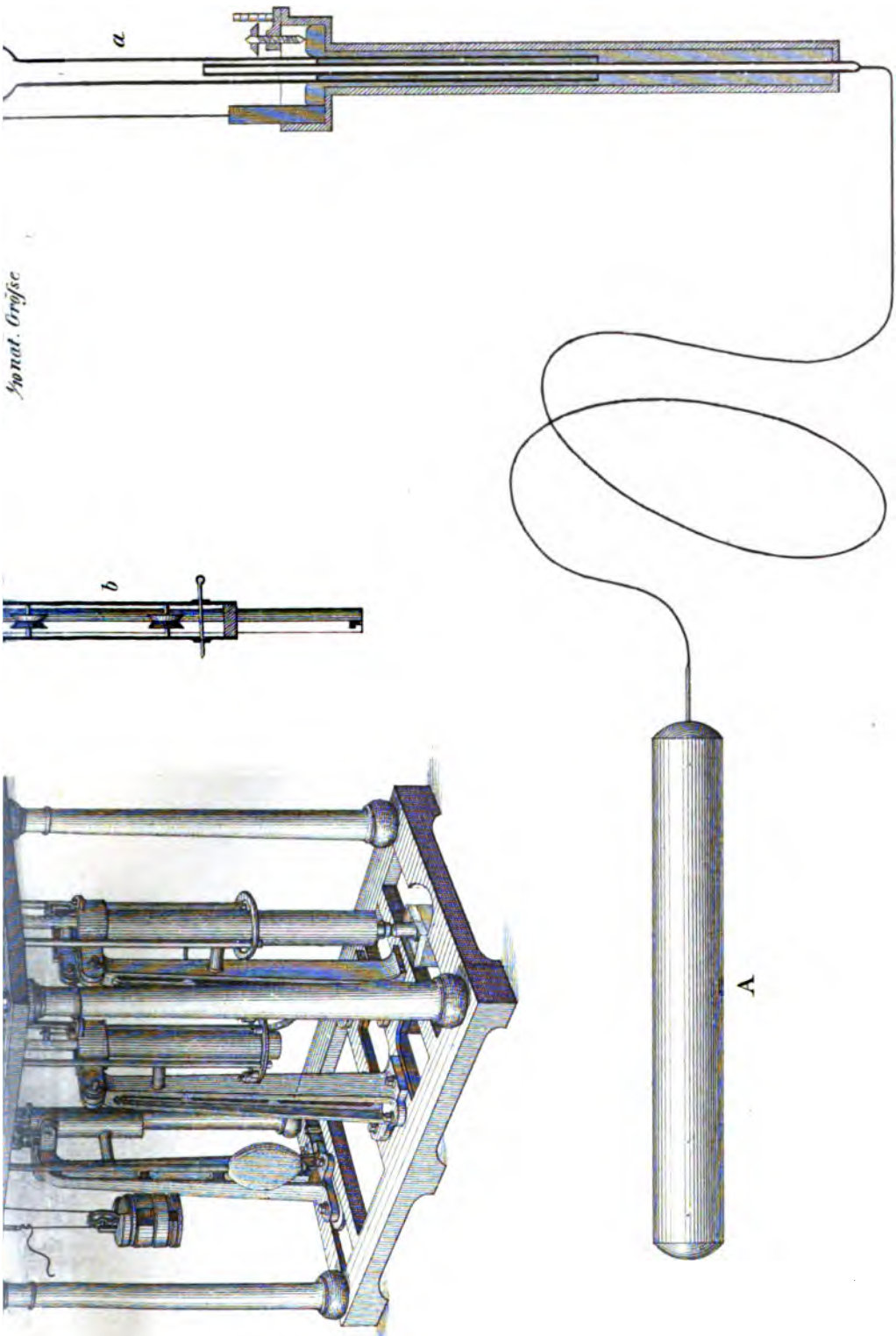

Natürl. Grösse

Grösse eines Ma

Digitized by Google

Lith. Anst. v. Jos Huber vorm. Joh. Moises in München.

Digitized by Google

Digitized by Google

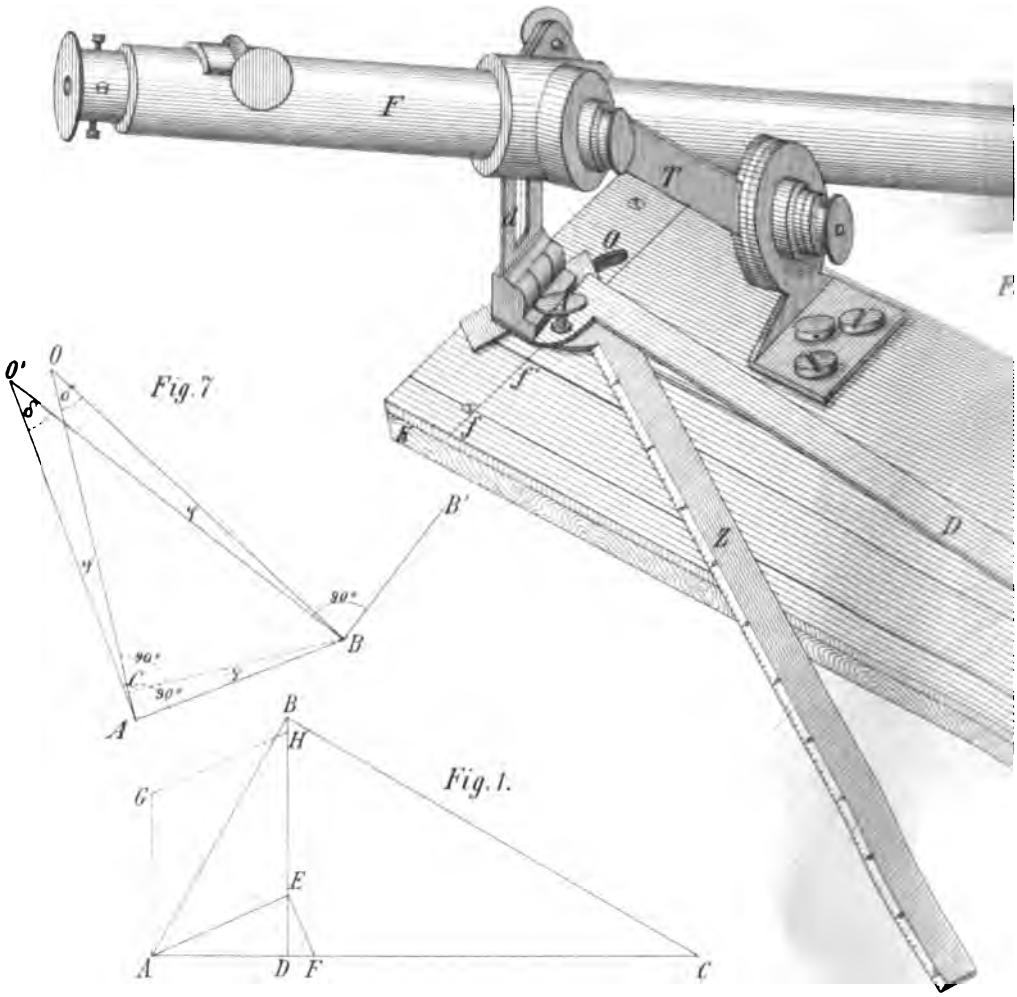

Fig. 7

Fig. 1.

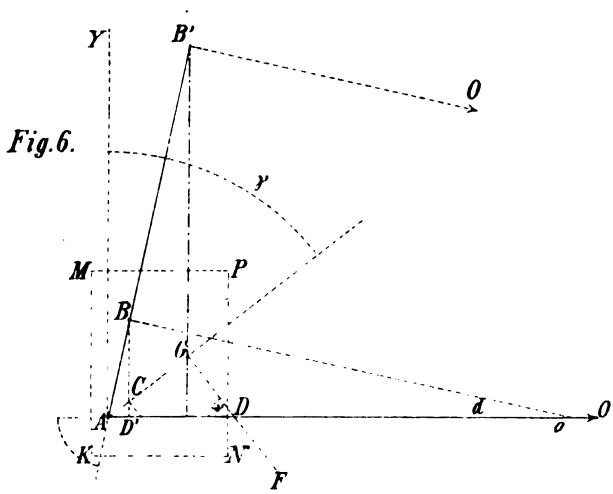

Fig. 6.

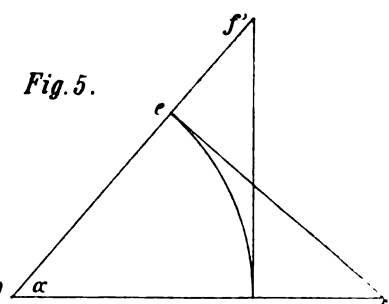

Fig. 5.

Ph. Carl's Repertorium Band 14

Digitized by Google

anzmeſser.

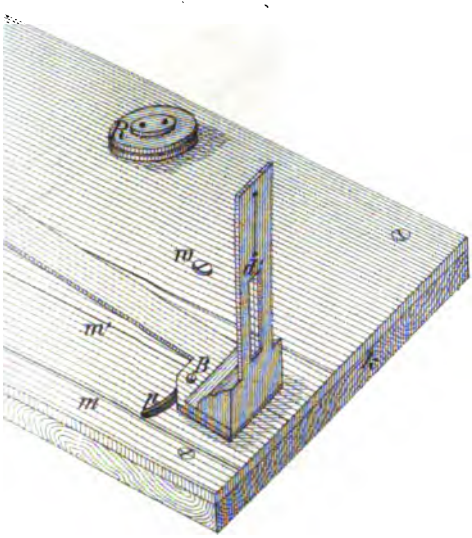

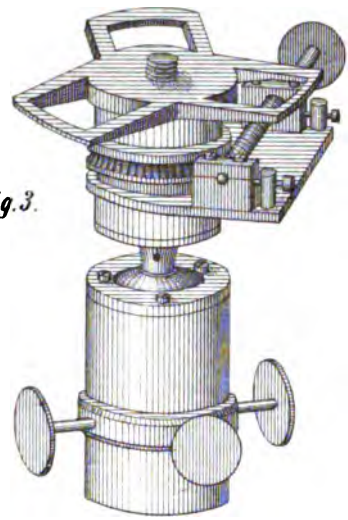

Fig. 3.

Fig. 4.

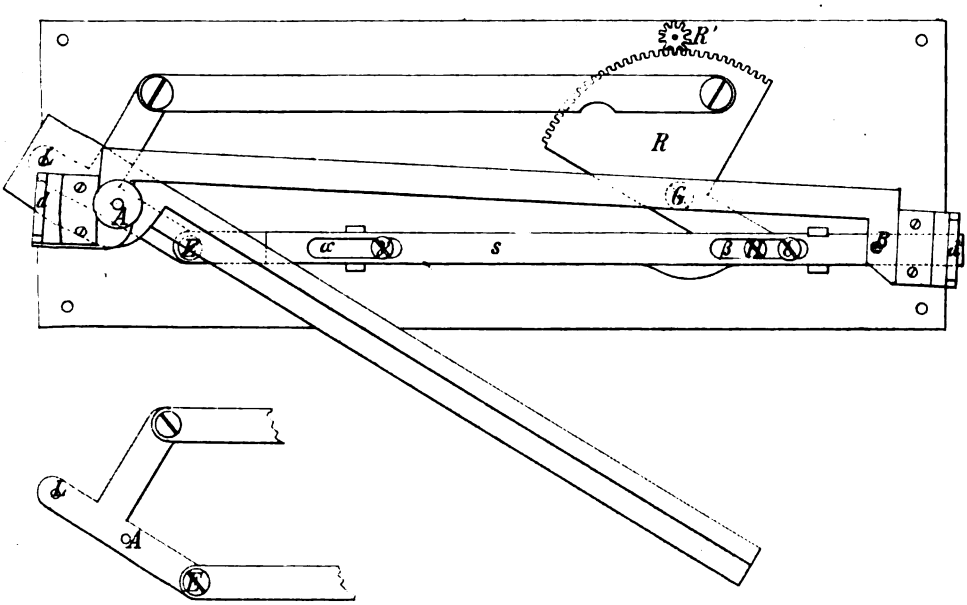

Lith. Anst. v. Jos. Hubertsborn, Joh. Meisenbach, München

Digitized by Google

Digitized by Google

Digitized by Google

Fig. 2.

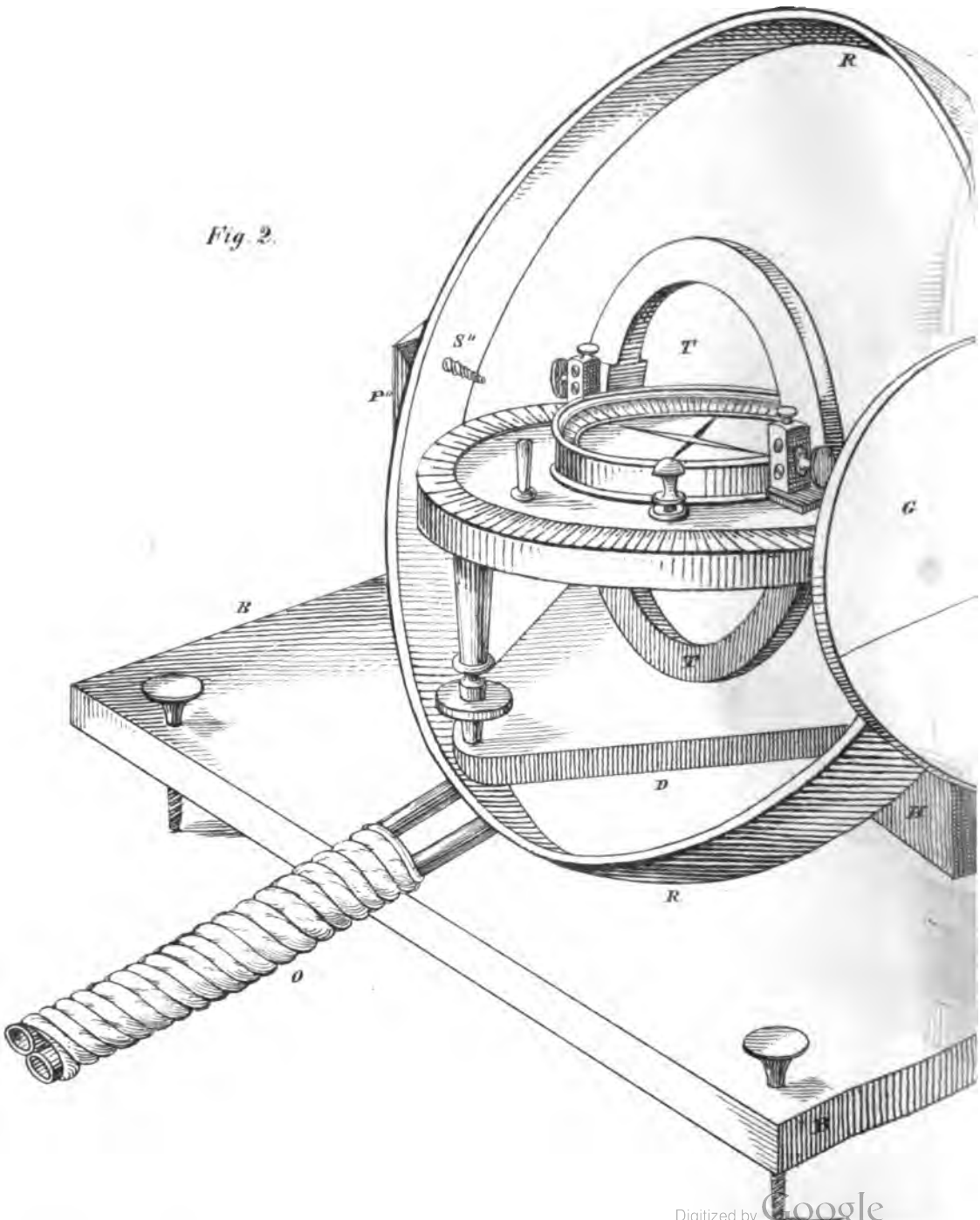

Digitized by Google

Messen starker electrischer Ströme.

Fig. 1.

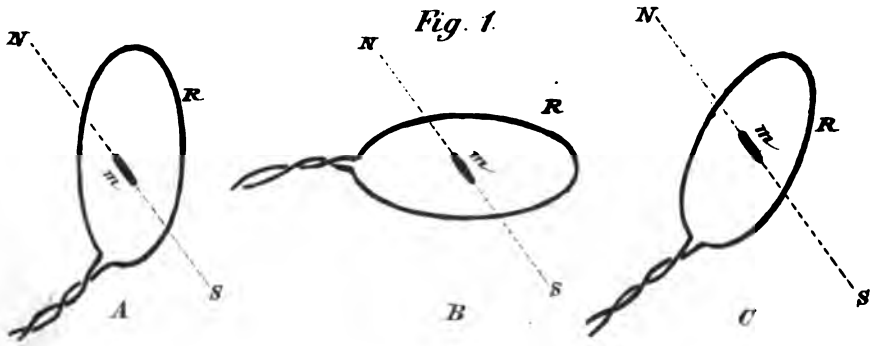

Fig. 3. a

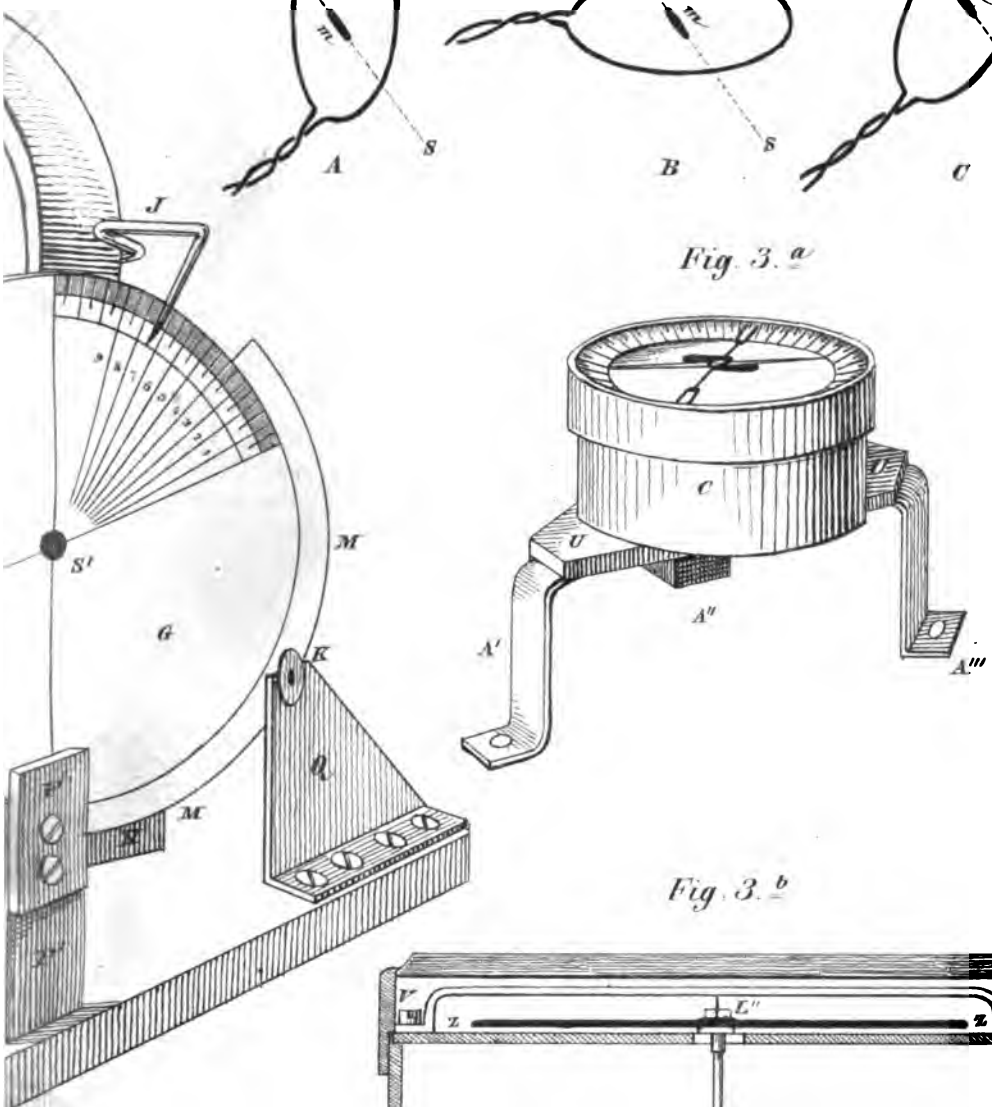

Fig. 3. b

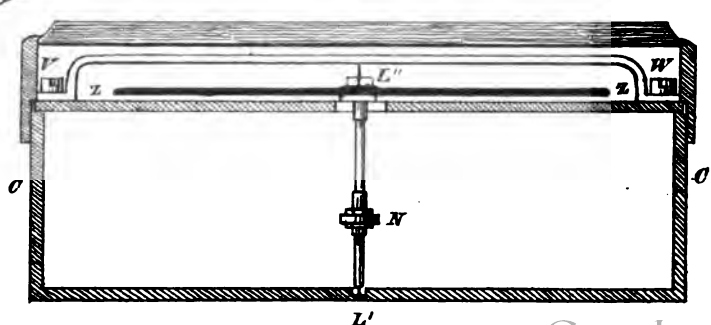

Digitized by Google

Lith Anst. d Jos Huber, vorm. Joh. Moises' Münc

Digitized by Google

Digitized by Google

Höfler's Schulapparat zur Demonstration der Superposition der Wellen.

Fig. 1a

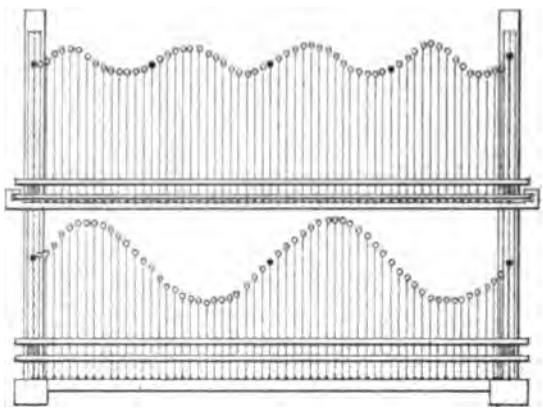

Fig. 1b

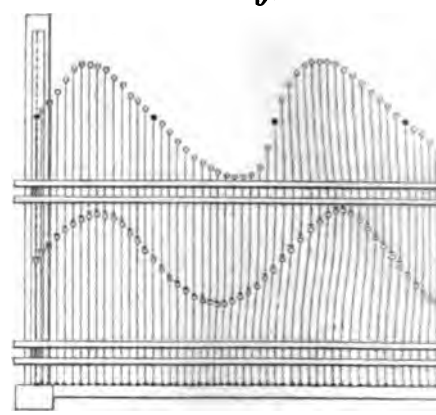

Fig. 2.

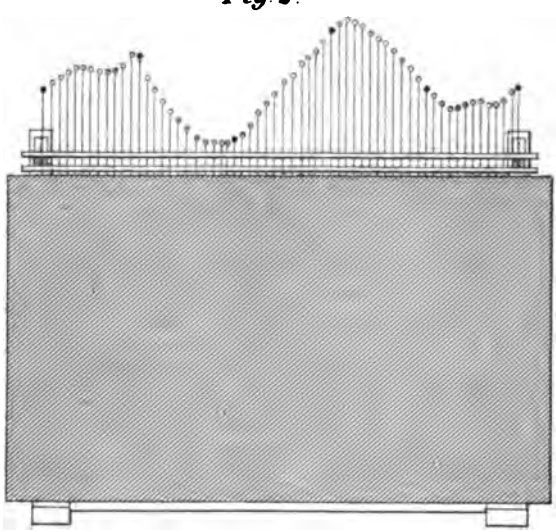

Fig. 3

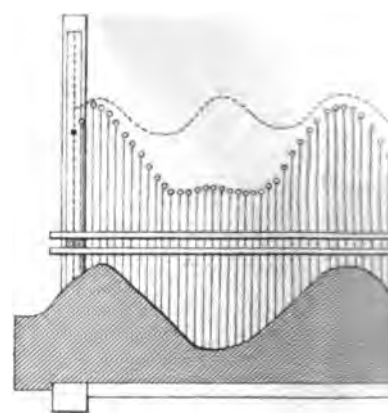

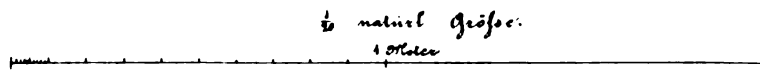

Digitized by Google

Zu der Abhandlung von A. Wassmuth.
Über das Maximum der Stromstärke.

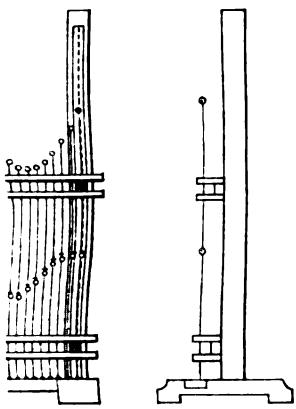

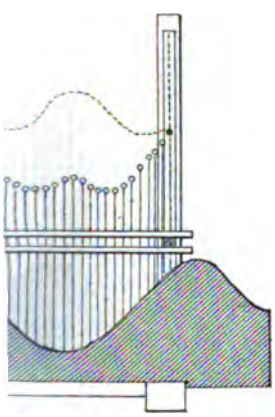

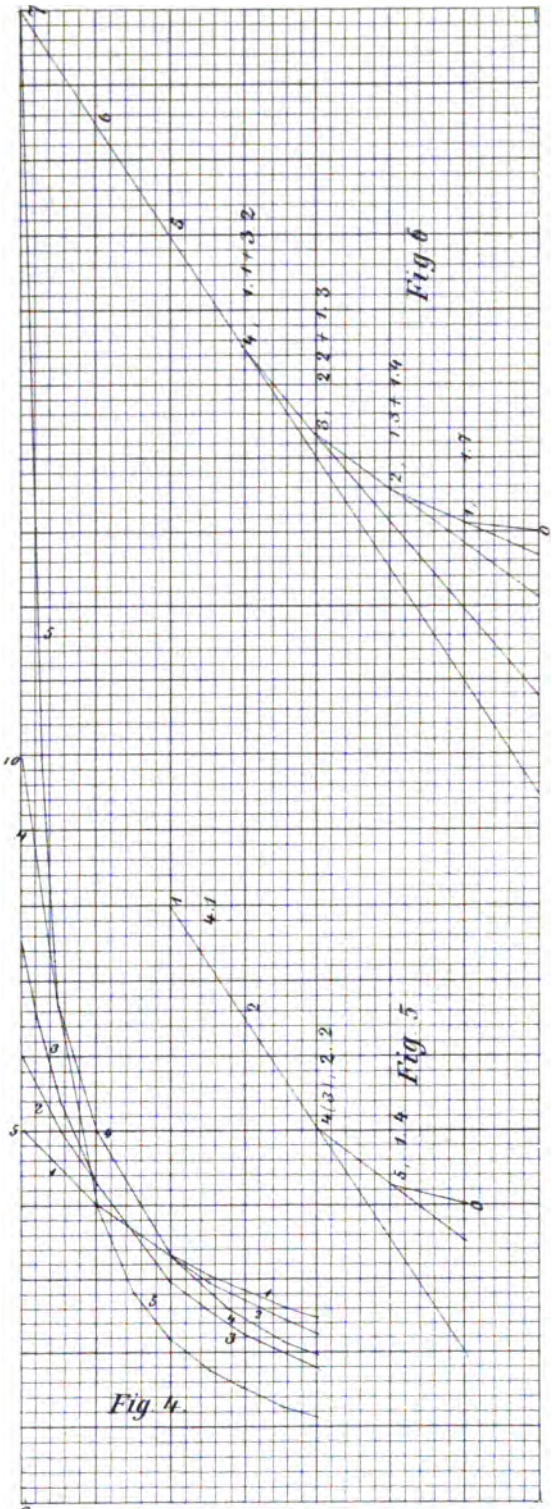

Fig. 4.

Fig. 5

Fig. 6

Lith. Anst. v. Jos. Hüber vorm. Joh. Mayer, München.

Digitized by Google

Digitized by Google

Beitrag zu den Erfahrungen über Naudet'sche Aneroide.

von Ch. August Vogler.

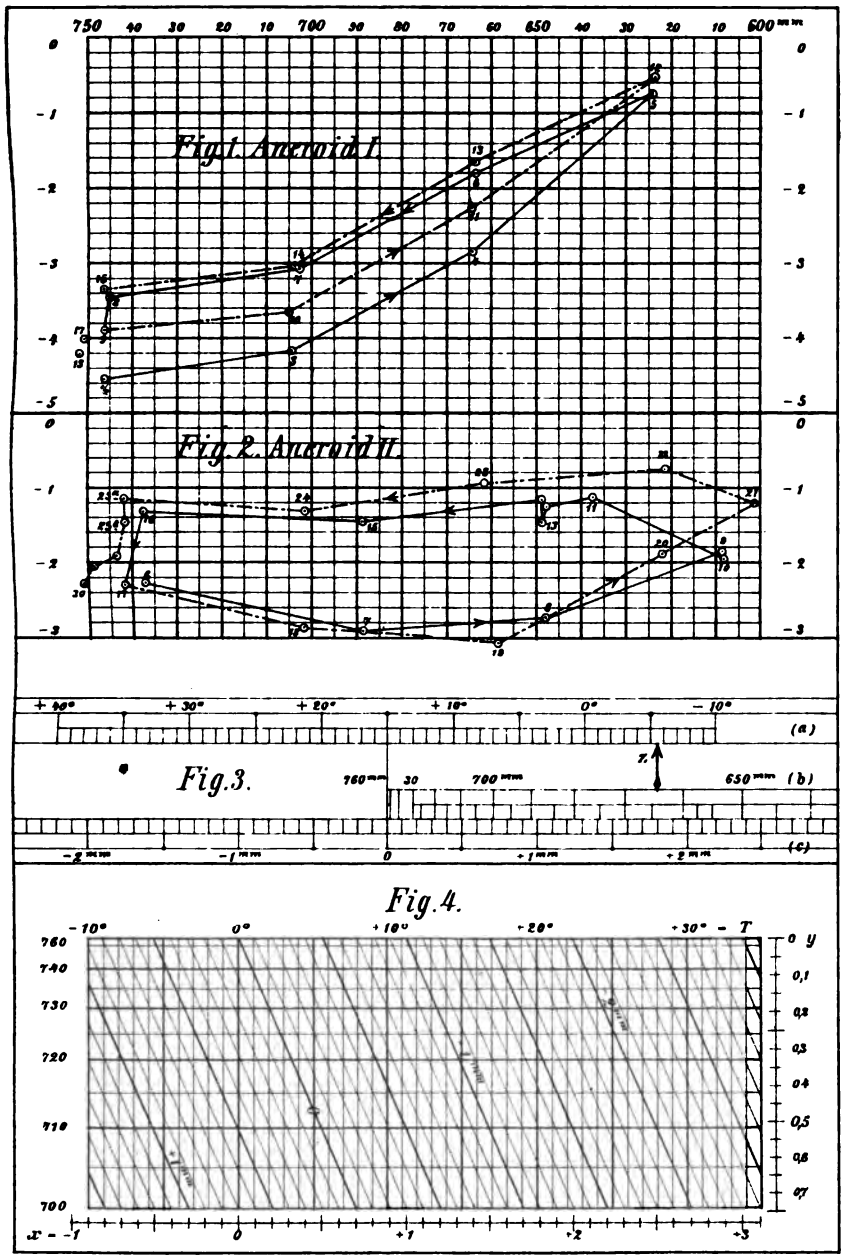

Lith. Anst. v. Jos. Huber vorm. Joh. Lutz, München.

Digitized by Google

Digitized by Google

Digitized by Google

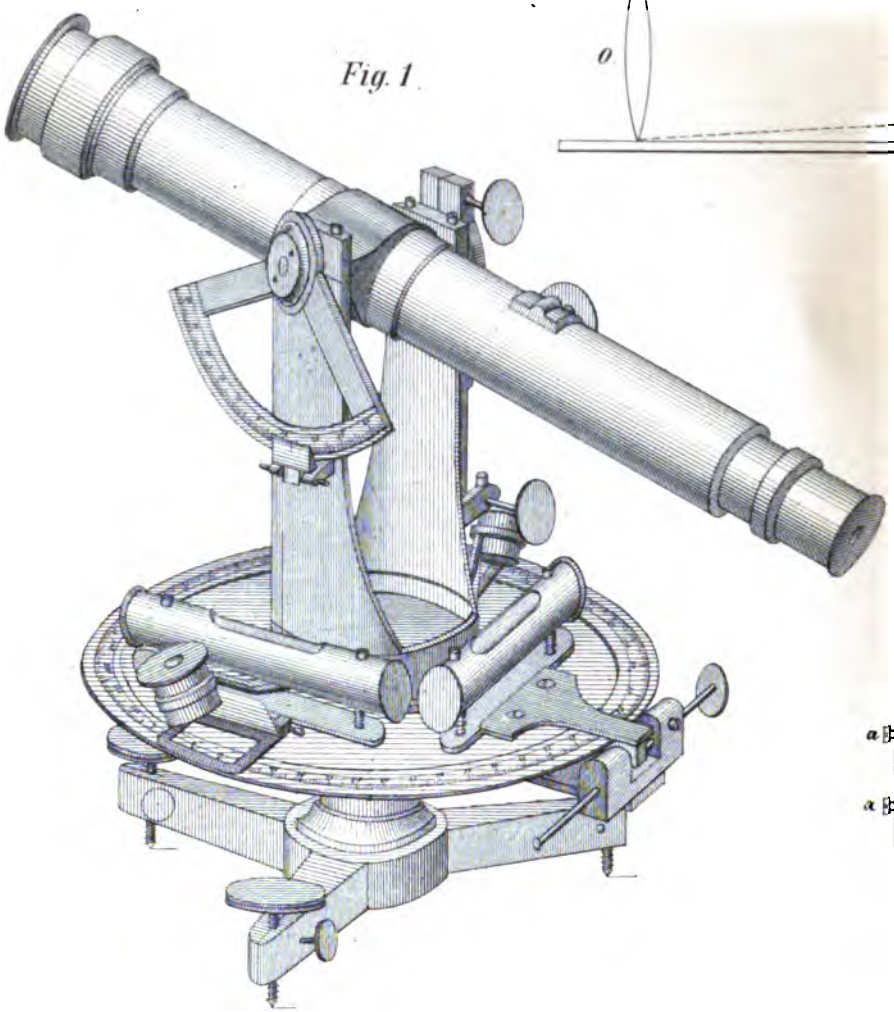

Fig. 1.

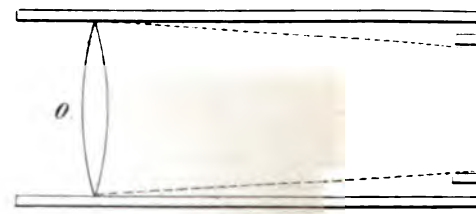

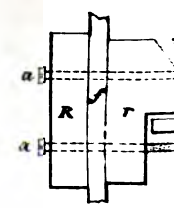

Unge

Digitized by Google

diastimometrischem Fernrohr

Fig. 2.

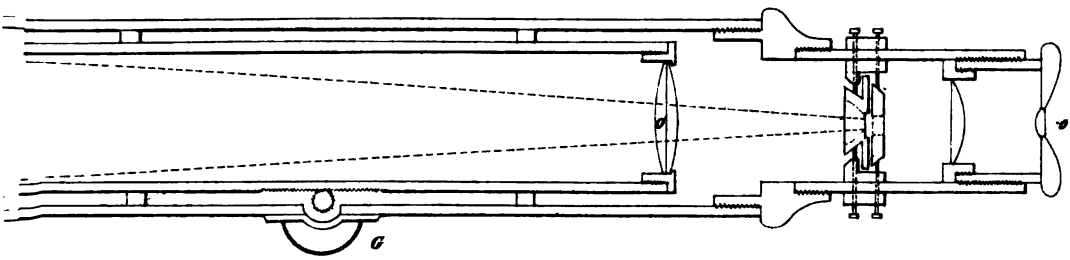

Fig. 3.

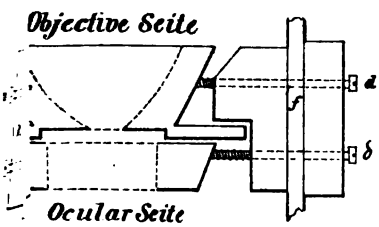

hr 6mal vergrößert.

Fig. 4.

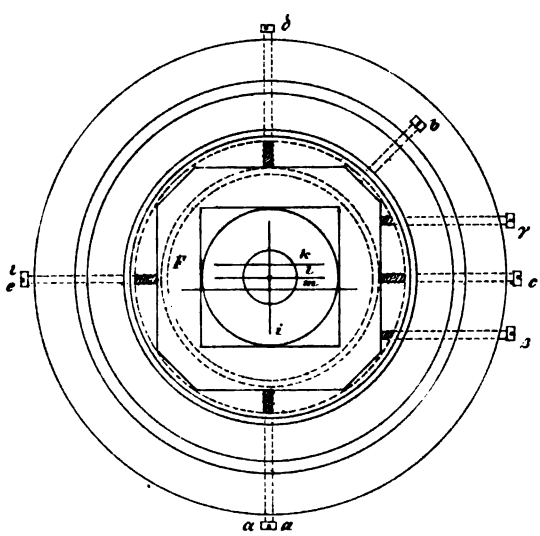

Lith. Anst. v. Jos. Huber, vorm. Joh. Meises München.

Digitized by Google

Digitized by Google

Digitized by Google

Riecke's Tangentenmultiplicator

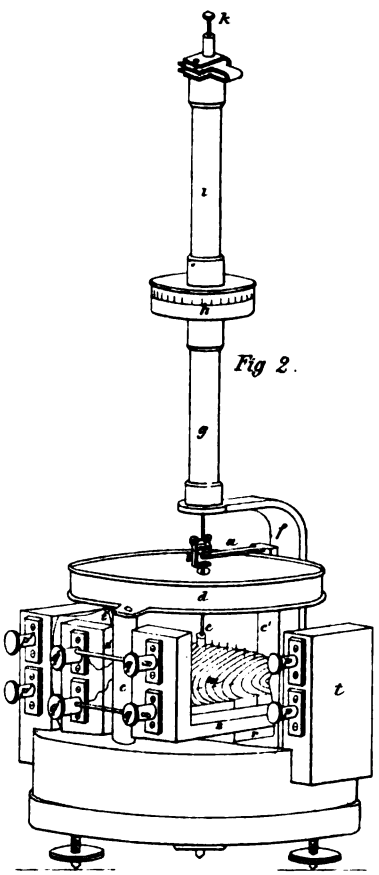

Fig 2.

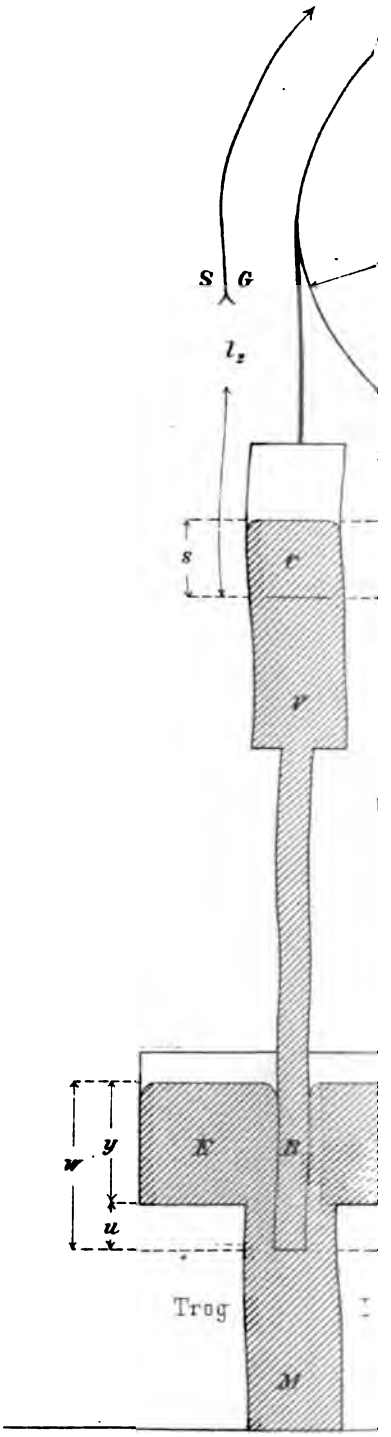

Digitized by Google

Neues Wagebarometer mit Rolle und in Quecksilber schwimmendem Gegengewicht von Dr. Paul Schreiber in Chemnitz.

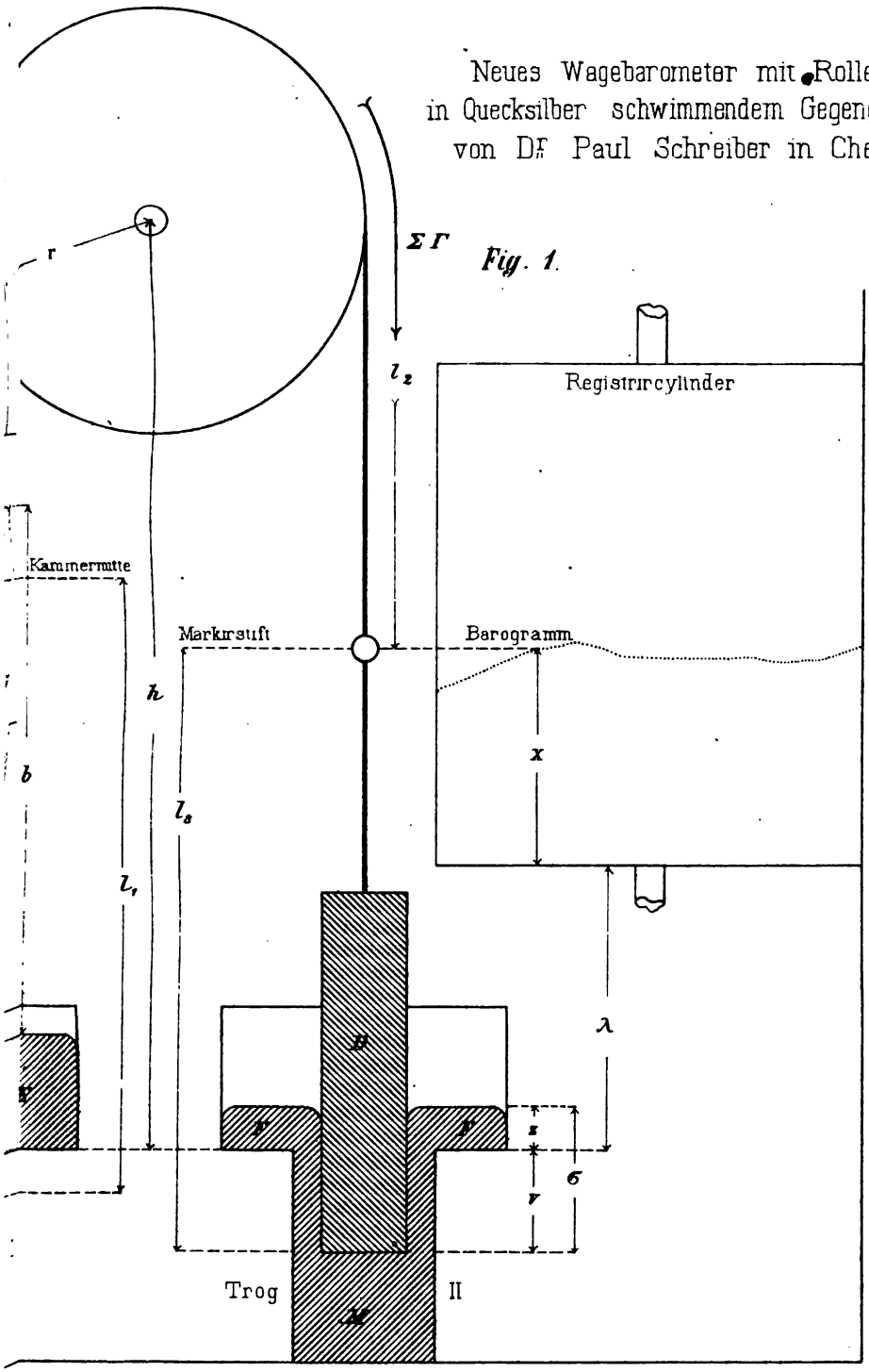

Digitized by Google

Lith. Anst. von Jos. Huber, vorm. Joh. Moses, München

Digitized by Google

Digitized by Google

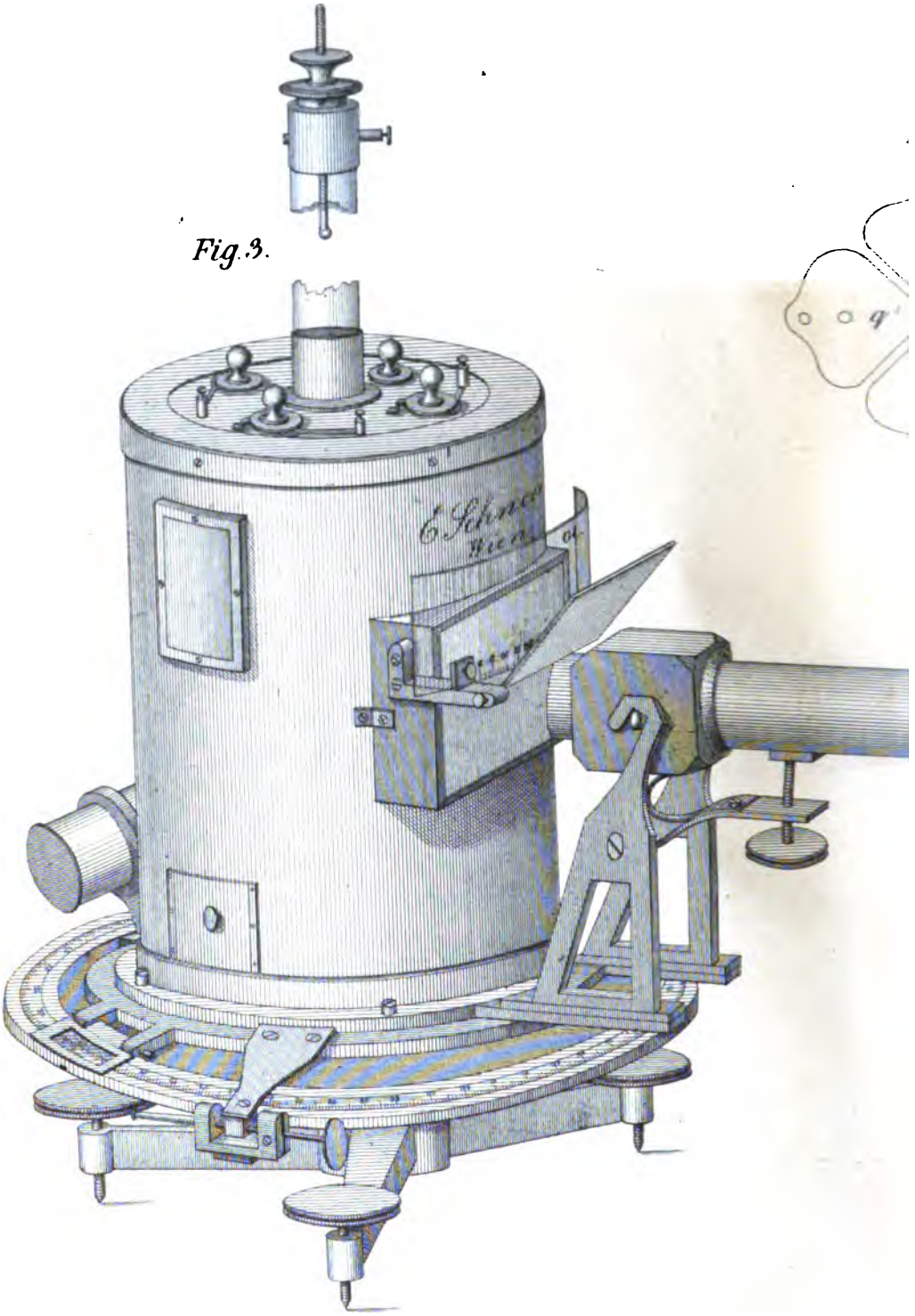

Fig. 3.

Digitized by Google

s-Elektrometer.

Fig. 2.

Fig. 1.

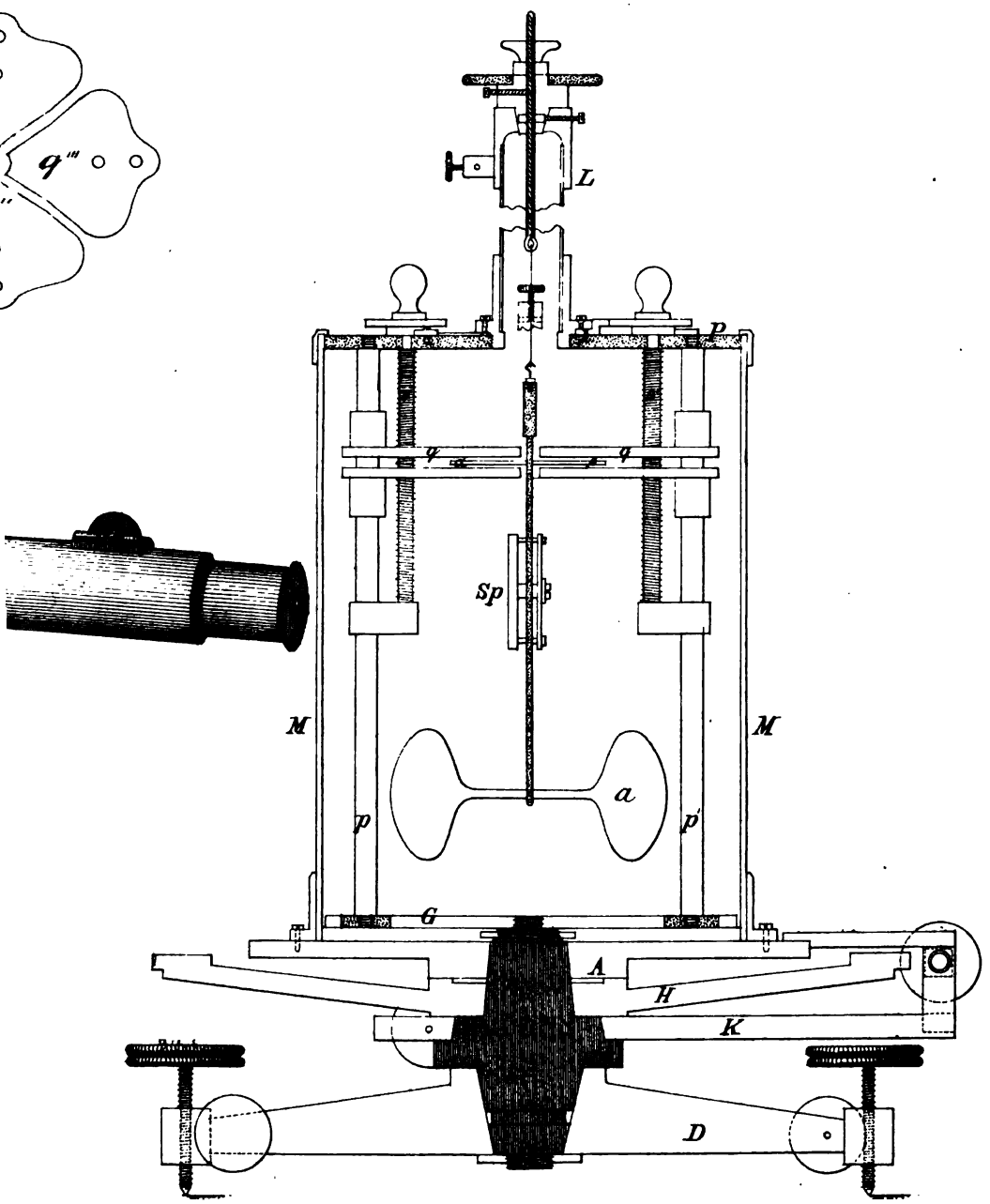

Lith. Anst. v. Jos. Huber, vorm. Joh. Moses, München.

Digitized by Google

Digitized by Google

Digitized by Google

Fig 1.

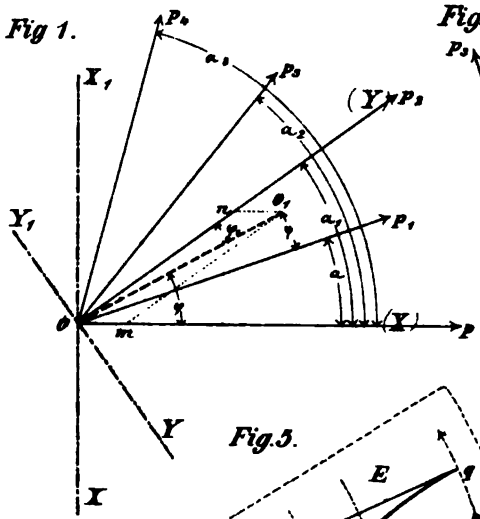

Fig.2.

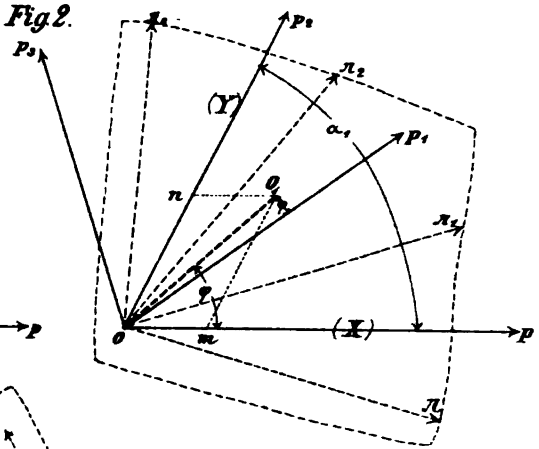

Fig.3.

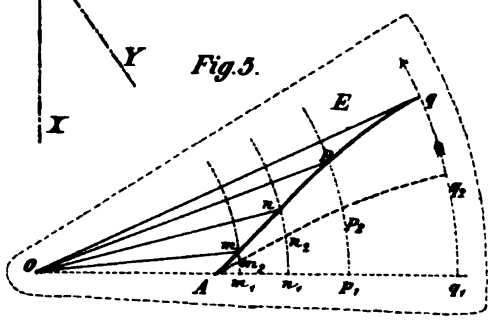

Fig.6.

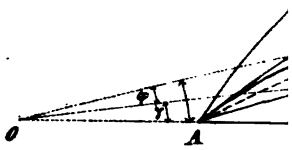

Fig.8.

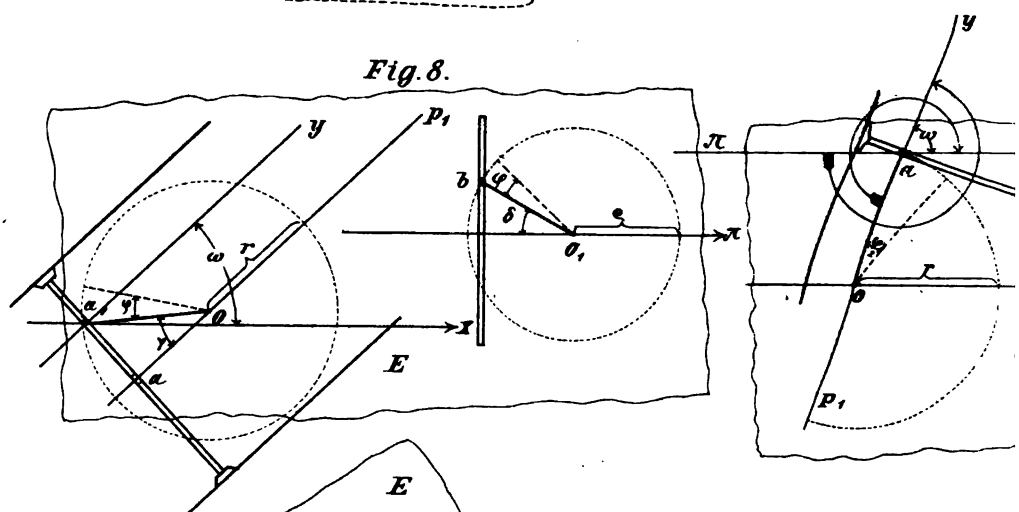

Fig.11.

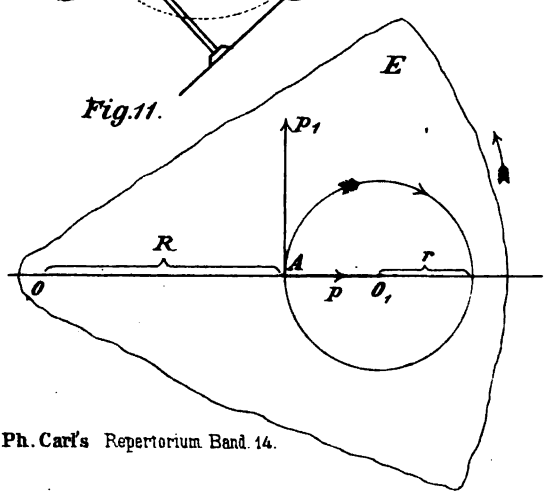

Fig.12.

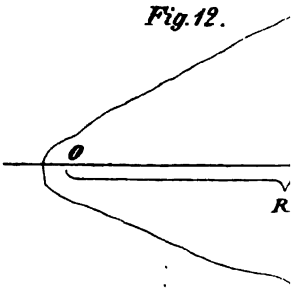

Digitized by Google

von Apparaten zum Anreifsen von Curven.

Fig. 3.

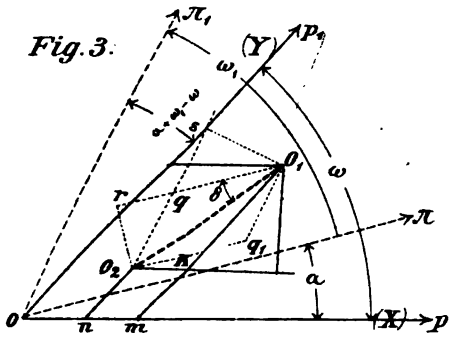

Fig. 4.

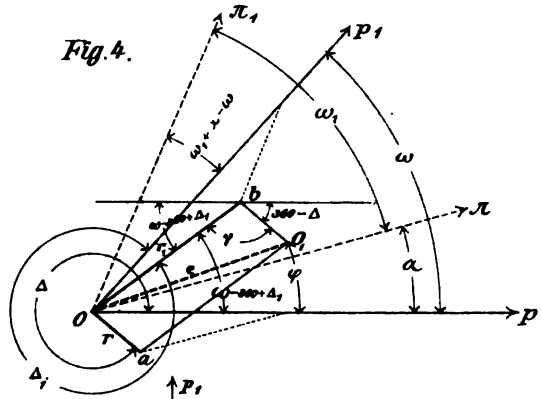

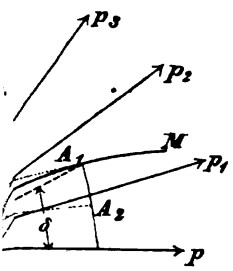

Fig. 7.

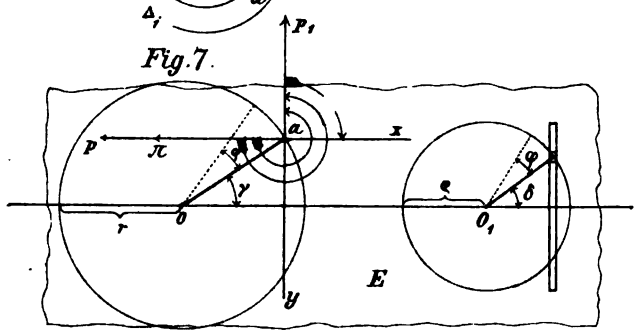

Fig. 9.

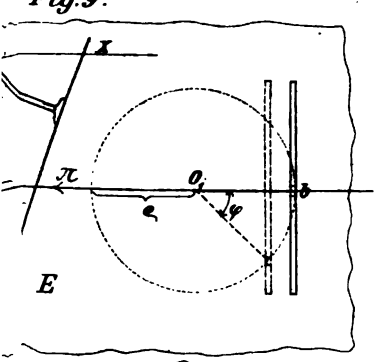

Fig. 10

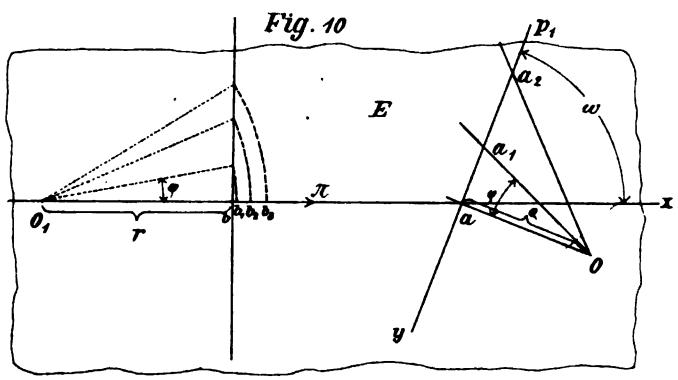

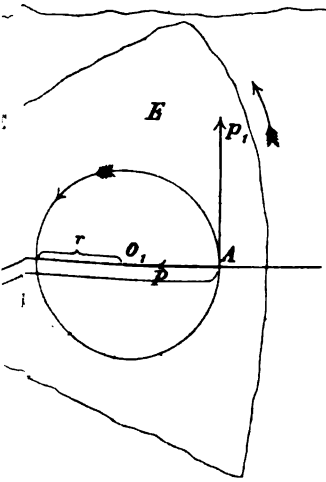

Fig. 13.

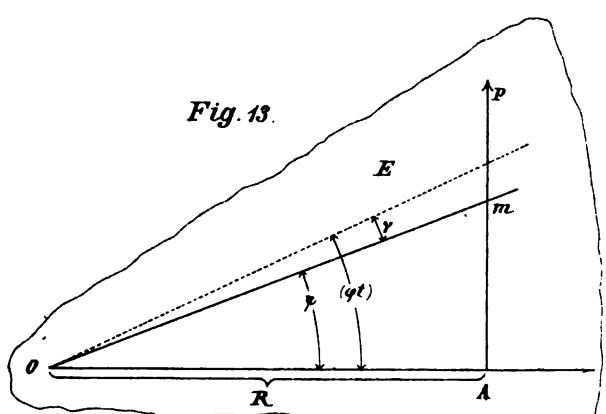

Digitized by Google

Lith. Anst. v. Jos. Huber, vorm. Joh. Müses, München.

Digitized by Google

Digitized by Google

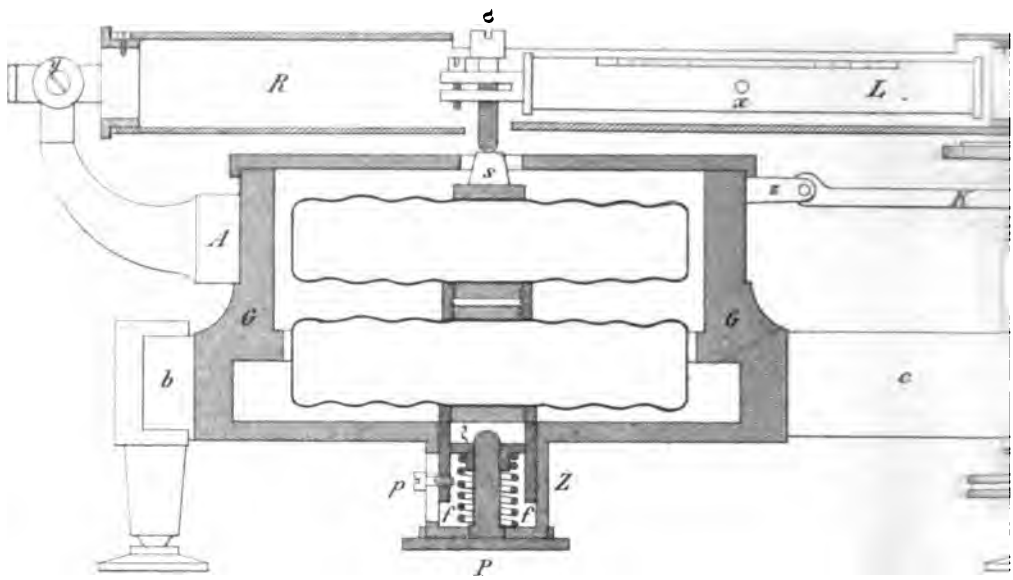

Fig. 1

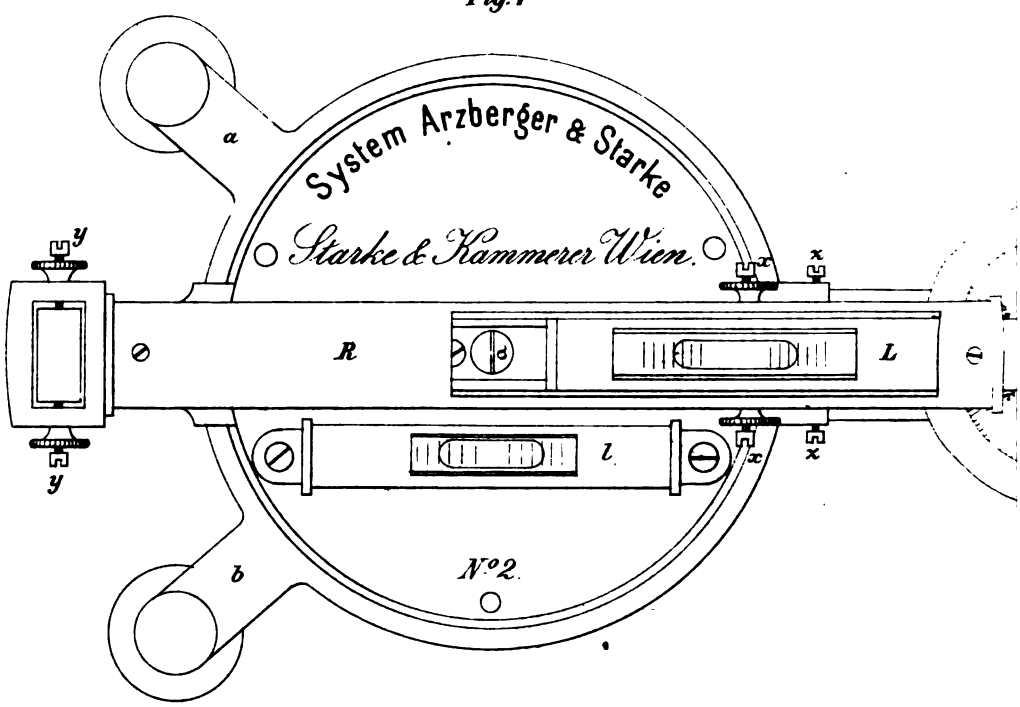

Digitized by Google

Fig. 2.

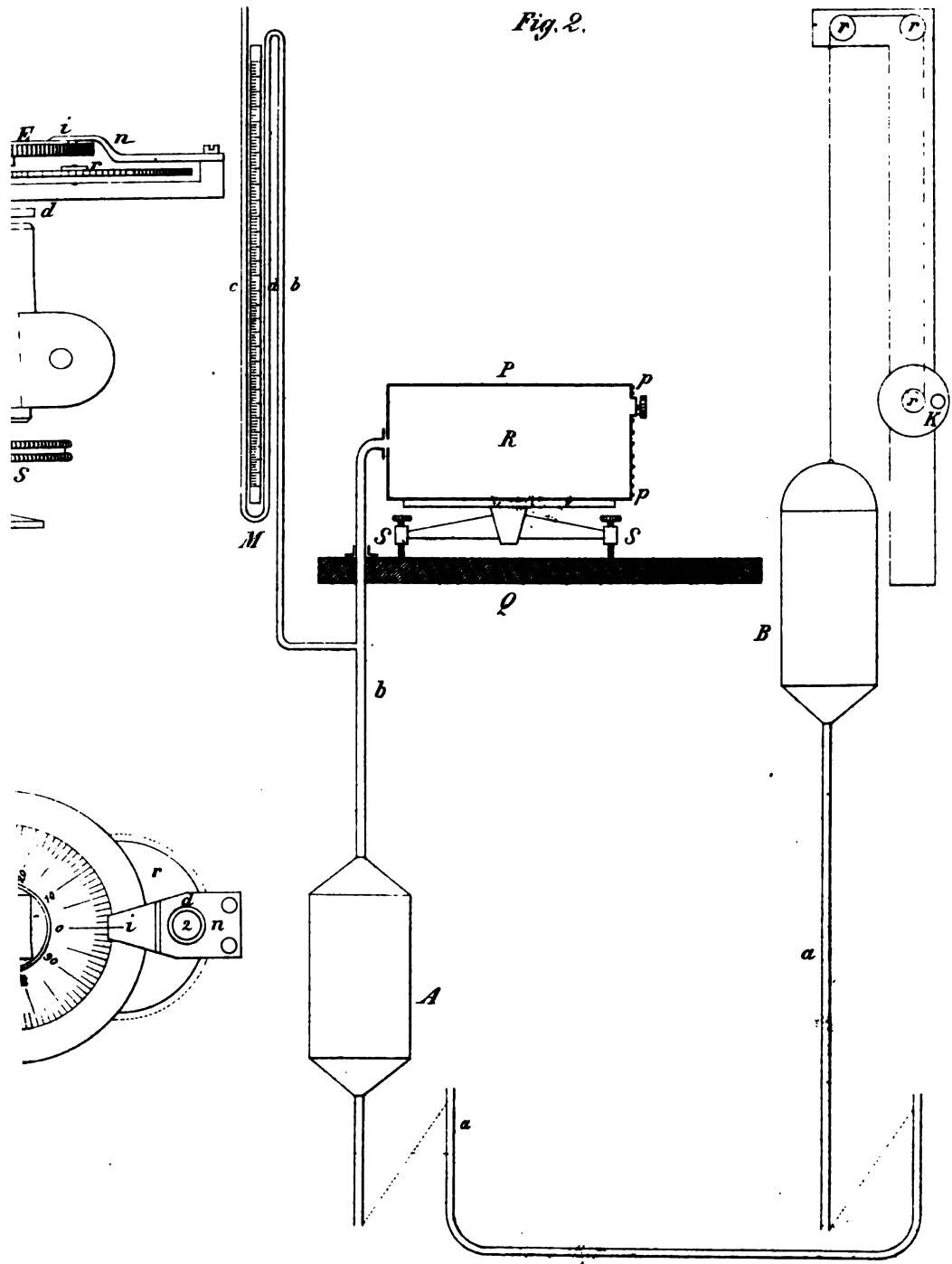

Lith. Anst. v. Jos. Huber vorm. Joh. Maises in München.

Digitized by Google

Digitized by Google

Digitized by Google

Fig

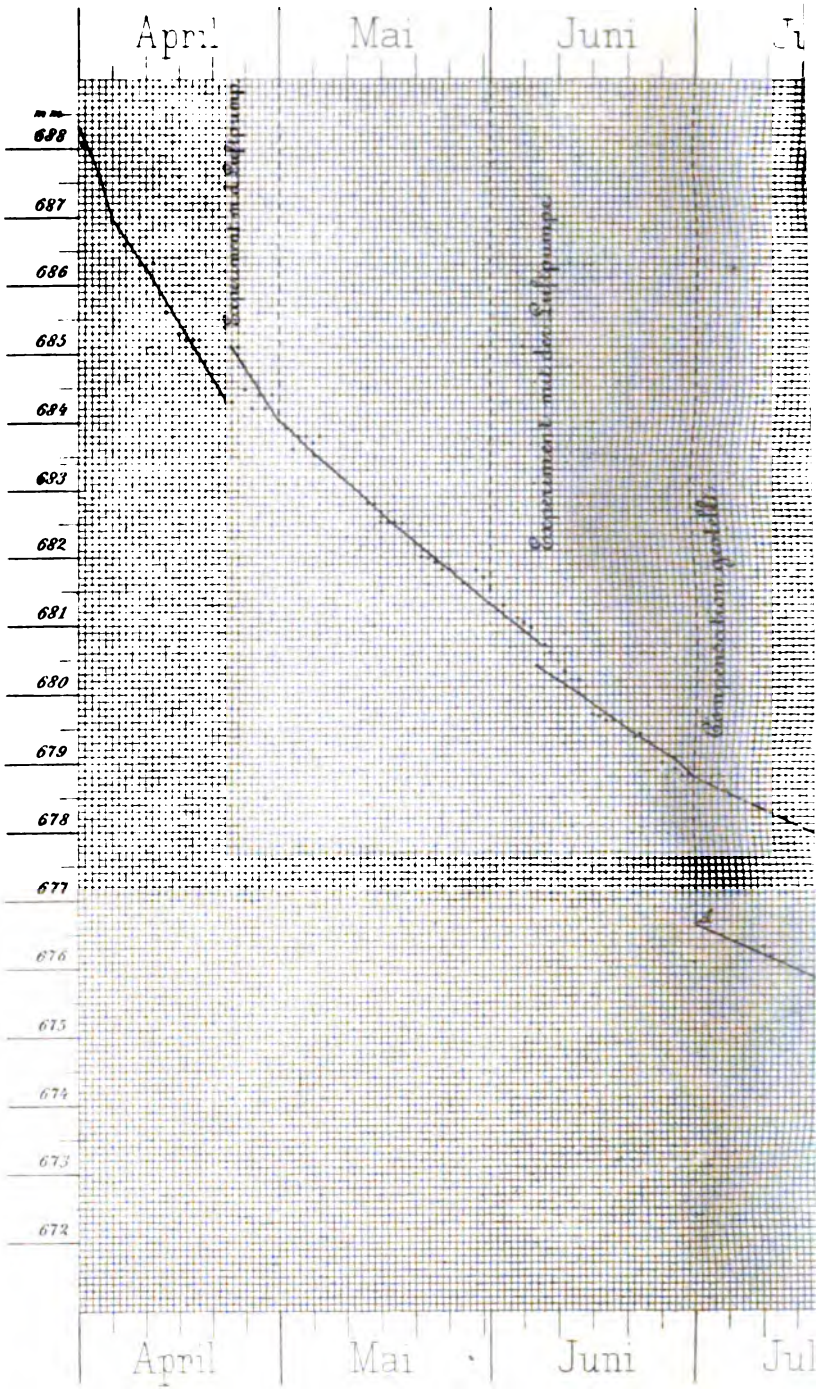

Digitized by Google

d-Aneroid Barometer.

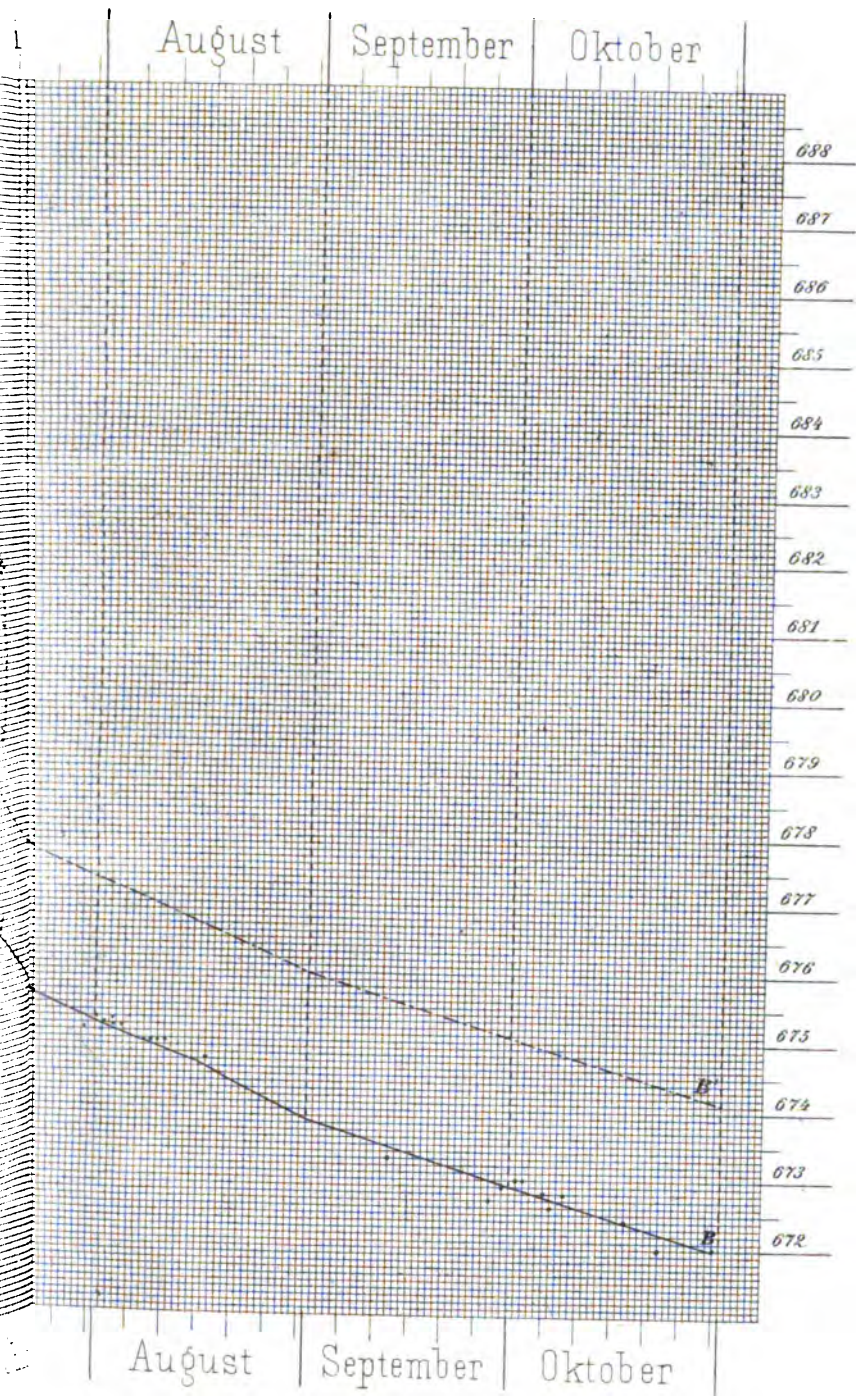

Digitized by Google

Lith. Anst. v. Jos. Huber vorm. Joh. Meixner in München.

Digitized by Google

Digitized by Google

Digitized by Google

Digitized by Google

Digitized by Google

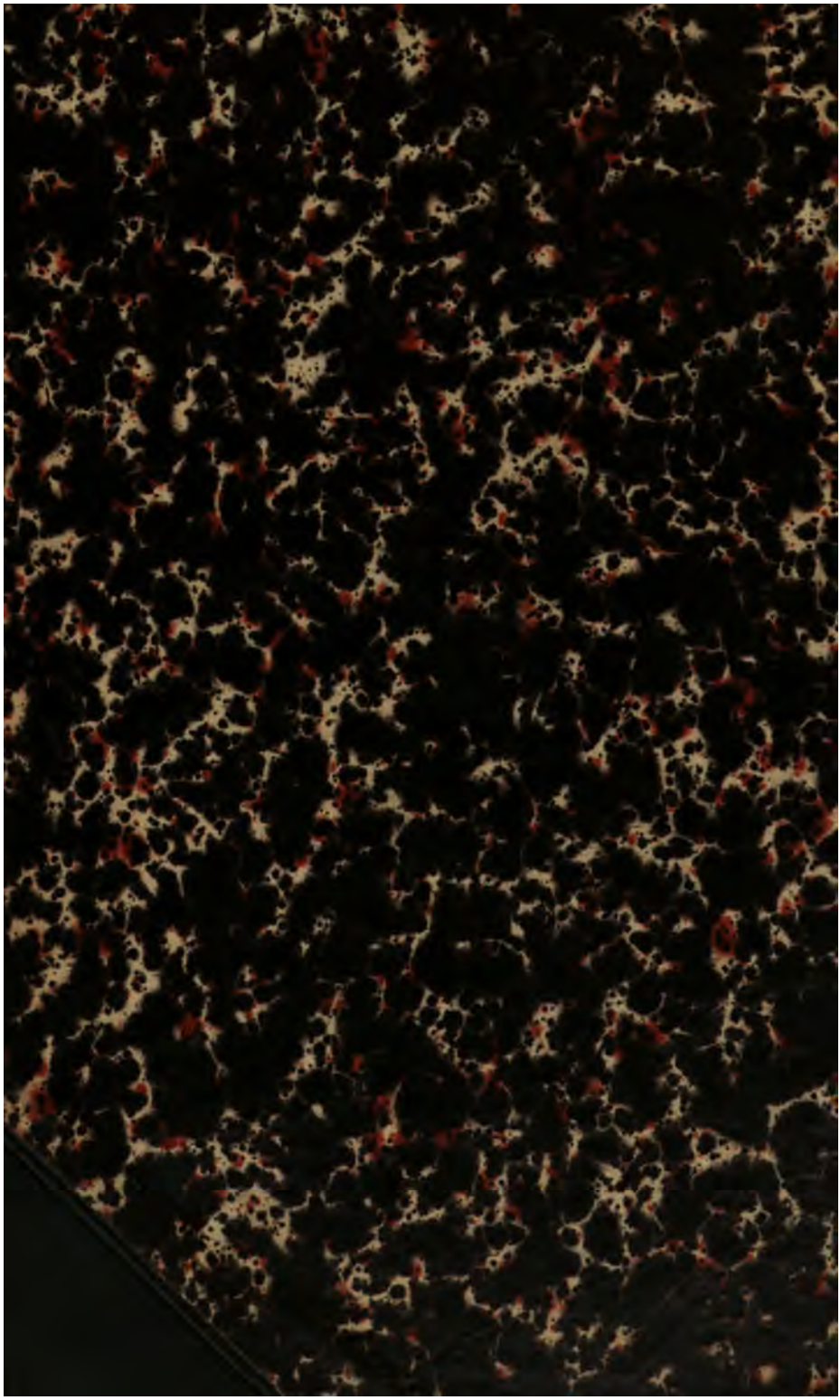

Digitized by Google